Operator's Manual

Veterinary Intensive Care Cabin

ViCare U7/ViCare U7L/ViCare U7R

©2026 Shenzhen Mindray Animal Medical Technology Co., Ltd. All Rights Reserved.

For this Operator's Manual, the issue date is 2026-05.

Important!

The device is veterinary use only.

Intellectual Property Statement

Shenzhen Mindray Animal Medical Technology Co., Ltd. (hereinafter called Mindray Animal Medical) owns the intellectual property rights to this device and this manual. This manual may refer to information protected by copyright or patents and does not convey any license under the patent rights or copyright of Mindray Animal Medical, or of others.

Mindray Animal Medical intends to maintain the contents of this manual as confidential information. Disclosure of the information in this manual in any manner whatsoever without the written permission of Mindray Animal Medical is strictly forbidden.

Release, amendment, reproduction, distribution, rental, adaptation, translation or any other derivative work of this manual in any manner whatsoever without the written permission of Mindray Animal Medical is strictly forbidden.

mindray is the trademark of SHENZHEN MINDRAY BIO-MEDICAL ELECTRONICS CO., LTD. in China and other countries. All other trademarks that appear in this manual are used only for informational or editorial purposes. They are the property of their respective owners.

Responsibility on the Manufacturer Party

Contents of this manual are subject to change without prior notice.

All information contained in this manual is believed to be correct. Mindray Animal Medical shall not be liable for errors contained herein or for incidental or consequential damages in connection with the furnishing, performance, or use of this manual.

Mindray Animal Medical is responsible for the effects on safety, reliability and performance of this device, only if:

- all installation operations, expansions, changes, modifications and repairs of this device are conducted by Mindray Animal Medical authorized personnel;
- the electrical installation of the relevant room complies with the applicable national and local requirements; and
- the device is used in accordance with the instructions for use.

NOTE

This device must be operated by skilled/trained clinical professionals.

WARNING

It is important for the hospital or organization that employs this device to carry out a reasonable service/maintenance plan. Neglect of this may result in machine breakdown or personal injury.

Warranty

THIS WARRANTY IS EXCLUSIVE AND IS IN LIEU OF ALL OTHER WARRANTIES, EXPRESSED OR IMPLIED, INCLUDING WARRANTIES OF MERCHANTABILITY OR FITNESS FOR ANY PARTICULAR PURPOSE.

Exemptions

Mindray Animal Medical's obligation or liability under this warranty does not include any transportation or other charges or liability for direct, indirect or consequential damages or delay resulting from the improper use or application of the device or the use of parts or accessories not approved by Mindray Animal Medical or repairs by people other than Mindray Animal Medical authorized personnel.

This warranty shall not extend to:

- Malfunction or damage caused by improper use or man-made failure.
- Malfunction or damage caused by unstable or out-of-range power input.
- Malfunction or damage caused by force majeure such as fire and earthquake.
- Malfunction or damage caused by improper operation or repair by unqualified or unauthorized service people.
- Malfunction of the instrument or part whose serial number is not legible enough.
- Others not caused by instrument or part itself.

Contact Information

Global Service Department

Shenzhen Mindray Animal Medical Technology Co., Ltd.	
Address:	Room 702, Tower 4, YESUN Intelligent Community III, No.1301-88 Guanguang Road, Xinlan Community, Guanlan Street, Longhua District, Shenzhen 518110, P. R. China
Website:	www.mindrayanimal.com
E-mail Address:	service@mindrayanimal.com
Tel:	+86 755 33997000

North America Service Department

Mindray Animal Medical Technology North America Co., Ltd.	
Address:	1200 MacArthur Blvd, Unit 302B, Mahwah, NJ 07430, USA
E-mail Address:	naservice@mindrayanimal.com
Tel:	1.800.864.5364

Important Information

- It is the customer's responsibility to maintain and manage the device after delivery.
- The warranty does not cover the following items, even during the warranty period:
  - Damage or loss due to misuse or abuse.
  - Damage or loss caused by Acts of God such as fires, earthquakes, floods, lightning, etc.
  - Damage or loss caused by failure to meet the specified conditions for this device, such as inadequate power supply, improper installation or environmental conditions.
  - Damage or loss due to use of the device outside the region where the device was originally sold.
  - Damage or loss involving the device purchased from a source other than Mindray Animal Medical or its authorized agents.
- This device shall not be used by persons other than fully qualified and certified medical personnel.
- DO NOT make changes or modifications to the software or hardware of this device.
- In no event shall Mindray Animal Medical be liable for problems, damage, or loss caused by relocation, modification, or repair performed by personnel other than those designated by Mindray Animal Medical.
- The purpose of this device is to provide physicians with data for clinical diagnosis. The physician is responsible for the results of diagnostic procedures. Mindray Animal Medical shall not be liable for the results of diagnostic procedures.
- Important data must be backed up on external memory media.
- Mindray Animal Medical shall not be liable for loss of data stored in the memory of this device caused by operator error or accidents.

- This manual contains warnings regarding foreseeable potential dangers, but you shall also be continuously alert to dangers other than those indicated. Mindray Animal Medical shall not be liable for damage or loss resulting from negligence or ignorance of the precautions and operating instructions described in this operator's manual.
- If a new manager takes over this device, be sure to hand over this operator's manual to the new manager.

About This Manual

This operator's manual describes the operating procedures for this device. To ensure safe and correct operation, carefully read and understand the manual before operating the device.

NOTE

- If you find that the contents of the multi-language manuals are NOT consistent with the device or the English manuals, refer ONLY to the corresponding English manuals.
- The accompanying manuals may vary depending on the specific device you purchased. Please refer to the packing list.

Meaning of Signal Words

In this manual, the signal words ⚠**DANGER,** ⚠**WARNING,** ⚠**CAUTION**, **NOTE** and **TIP** are used regarding safety and other important instructions. The signal words and their meanings are defined as follows. Please understand their meanings clearly before reading this manual.

Signal word	Meaning
⚠ **DANGER**	Indicates an imminently hazardous situation that, if not avoided, will result in death or serious injury.
⚠ **WARNING**	Indicates a potentially hazardous situation that, if not avoided, could result in death or serious injury.
⚠ **CAUTION**	Indicates a potentially hazardous situation that, if not avoided, may result in minor or moderate injury.
NOTE	Indicates a potentially hazardous situation that, if not avoided, may result in property damage.
TIP	Important information that helps you to use the device more effectively.

Software Interfaces in this Manual

Depending on the software version, preset settings and optional configuration, the actual interfaces may be different from those in this manual.

In this manual, the following conventions are used to describe the buttons on the control panel, items in the menus, buttons in the dialog boxes and some basic operations:

- Press XX: select the corresponding button on the control panel.
- **Bold font** indicates items in menus, on the soft menu or buttons in dialog boxes.
- Tap **Bold font**: select the corresponding item on the touch screen.
- **Bold font** > **Bold font**: select a submenu item following the path.

Contents

Intellectual Property Statement **1**

Responsibility on the Manufacturer Party **1**

Warranty **2**

Exemptions 2

Contact Information **3**

Global Service Department 3

North America Service Department 3

Important Information **3**

About This Manual **4**

Meaning of Signal Words 4

Software Interfaces in this Manual 4

1 Safety Information ..... **1 - 1**

1.1 Warnings ..... 1 - 1

1.2 Cautions ..... 1 - 2

1.3 Notes ..... 1 - 4

2 Product Overview ..... **2 - 1**

2.1 Intended Use ..... 2 - 1

2.2 Contraindications ..... 2 - 1

2.3 Introduction to Each Unit ..... 2 - 2

2.3.1 ViCare U7 ..... 2 - 2

2.3.2 ViCare U7L ..... 2 - 6

2.3.3 ViCare U7R ..... 2 - 10

2.4 Wireless Monitoring Modules ..... 2 - 14

2.4.1 SpO_2 Module (MAS30) ..... 2 - 14

2.4.2 Temp Module (MAT30) ..... 2 - 14

2.4.3 ECG module (MAE30) ..... 2 - 15

2.4.4 NIBP Module (MAB30) ..... 2 - 16

2.4.5 Receiver Module (R20) ..... 2 - 17

2.4.6 Chargers ..... 2 - 18

2.5 Portable Storage Bag ..... 2 - 19

2.6 Screen Display ..... 2 - 20

2.6.1 Available Quick Keys ..... 2 - 21

2.6.2 On-screen Symbols ..... 2 - 23

2.7 Symbols and Warning Labels ..... 2 - 24

3 Basic Operations ..... **3 - 1**

3.1 Touch Screen Operations ..... 3 - 1

3.1.1 Tapping or Swiping across the Screen ..... 3 - 1

3.1.2 Soft Keyboard Operations ..... 3 - 1

3.1.3 Submenu Operations ..... 3 - 2
3.2 Locking the Touch Screen ..... 3 - 2
3.3 Using the On-Screen Timers ..... 3 - 3
3.4 Initiating a Manual Event ..... 3 - 3
3.5 Setting the Nursing Level Indicator ..... 3 - 4
3.6 Operating the Cabin Door ..... 3 - 4
3.6.1 Opening the Cabin Door ..... 3 - 4
3.6.2 Closing the Cabin Door ..... 3 - 4
3.6.3 Operating the Operation Window ..... 3 - 4

4 Preparations ..... 4 - 1

4.1 Installation ..... 4 - 1
4.1.1 Environmental Requirements ..... 4 - 1
4.1.2 Installing the Device ..... 4 - 2
4.2 Connecting the Power Supply ..... 4 - 3
4.2.1 Connecting the AC Power Supply ..... 4 - 3
4.2.2 Using the Battery ..... 4 - 3
4.3 Connecting Oxygen Supplies ..... 4 - 5
4.3.1 Connecting the High-Pressure Oxygen Supply ..... 4 - 5
4.3.2 Connecting the Low-Pressure Oxygen Supply ..... 4 - 6
4.4 Filling Water to the Water Tank ..... 4 - 7
4.5 Filling/Replacing the Soda Lime ..... 4 - 8
4.6 Installing Curtains ..... 4 - 12
4.7 Wireless Monitoring Modules ..... 4 - 13
4.7.1 Safety Information ..... 4 - 13
4.7.2 Charging the Batteries ..... 4 - 14
4.7.3 Installing the Receiver Module ..... 4 - 16
4.7.4 Installing the Battery of the Temp Module ..... 4 - 16
4.7.5 Connecting the Monitoring Modules ..... 4 - 17
4.7.6 Establishing Wireless Connection ..... 4 - 19
4.8 Powering On the Device ..... 4 - 21
4.8.1 Check before Powering On ..... 4 - 21
4.8.2 Turning on the Device ..... 4 - 21
4.8.3 Check after Powering On ..... 4 - 22
4.9 Turning Off the Device ..... 4 - 22
4.10 Standby ..... 4 - 22
4.10.1 Entering the Standby Mode ..... 4 - 23
4.10.2 Exiting the Standby Mode ..... 4 - 23

5 Setup ..... 5 - 1

5.1 **System Setup** ..... 5 - 1
5.1.1 Setting the Audio ..... 5 - 1
5.1.2 Setting the Date and Time ..... 5 - 2
5.1.3 Adjusting the Screen Brightness ..... 5 - 2
5.1.4 Other Settings ..... 5 - 2
5.1.5 Setting Night Mode ..... 5 - 2
5.1.6 Managing Configurations ..... 5 - 3
5.2 User Maintenance Settings ..... 5 - 6

5.2.1 General Maintenance ..... 5 - 6
5.2.2 Monitoring Maintenance ..... 5 - 16
5.2.3 Infusion Maintenance ..... 5 - 17
5.2.4 Environment Maintenance ..... 5 - 18
5.3 Learning and Demo ..... 5 - 19
5.4 About ..... 5 - 19

6 Managing Animals ..... 6 - 1

6.1 Admitting an Animal ..... 6 - 1
6.2 Editing Animal Information ..... 6 - 2
6.3 Discharging an Animal ..... 6 - 3

7 Alarms ..... 7 - 1

7.1 Safety Information ..... 7 - 1
7.2 Understanding the Alarms ..... 7 - 2
7.2.1 Alarm Categories ..... 7 - 2
7.2.2 Alarm Priorities ..... 7 - 2
7.2.3 Alarm Indicators ..... 7 - 2
7.2.4 Alarm Status Symbols ..... 7 - 4
7.2.5 Accessing On-screen Help for Alarms ..... 7 - 4
7.3 Changing Alarm Settings ..... 7 - 4
7.3.1 Setting parameter alarms ..... 7 - 4
7.3.2 Initiating Auto Alarm Limits ..... 7 - 5
7.3.3 Setting the Alarm Delay Time ..... 7 - 6
7.3.4 Setting the Apnea Delay Time ..... 7 - 6
7.3.5 Restoring the Default Alarm Settings ..... 7 - 7
7.3.6 Setting the Length of Printed Waveforms ..... 7 - 7
7.4 Pausing Alarms/Pausing Alarm Tones ..... 7 - 7
7.4.1 Defining the Pause Function ..... 7 - 7
7.4.2 Pausing Alarms ..... 7 - 7
7.4.3 Switching Off All Alarms ..... 7 - 8
7.4.4 Pausing Alarm Sound ..... 7 - 8
7.5 Resetting Alarms ..... 7 - 8
7.5.1 Resetting Physiological Alarms ..... 7 - 8
7.5.2 Resetting Technical Alarms ..... 7 - 9
7.6 Latching Alarms ..... 7 - 9
7.7 Testing Alarms ..... 7 - 9
7.8 Actions When an Alarm Occurs ..... 7 - 9

8 Environment Control ..... 8 - 1

8.1 Setting the Oxygen Concentration ..... 8 - 1
8.2 Setting the Atmosphere Temperatures ..... 8 - 3
8.3 Setting the Atmosphere Humidity ..... 8 - 4
8.4 Setting the CO_2 Concentration ..... 8 - 5
8.5 Auxiliary Functions ..... 8 - 7
8.5.1 Nebulization ..... 8 - 7
8.5.2 Ventilation ..... 8 - 9
8.5.3 Anion ..... 8 - 9

8.5.4 Light ..... 8 - 10
9 Monitoring ECG ..... 9 - 1
9.1 Overview ..... 9 - 1
9.2 Starting the ECG Monitoring ..... 9 - 2
9.3 Results Display ..... 9 - 3
9.4 Parameter Adjustment ..... 9 - 4
9.5 Monitoring Arrhythmia ..... 9 - 6
9.5.1 Safety Information ..... 9 - 6
9.5.2 Arrhythmia Events ..... 9 - 6
9.5.3 Displaying Arrhythmia Information ..... 9 - 8
9.5.4 Changing Arrhythmia Settings ..... 9 - 8
9.5.5 Setting the Lethal Arrhythmia Alarms Switch ..... 9 - 9
9.5.6 Arrhythmia Alarms Timeout ..... 9 - 11
9.6 ST Segment Monitoring ..... 9 - 14
9.6.1 Safety Information ..... 9 - 14
9.6.2 Enabling ST Monitoring ..... 9 - 14
9.6.3 Displaying ST Numerics ..... 9 - 14
9.6.4 Displaying the ST segment in the waveform area ..... 9 - 15
9.6.5 Entering the ST View ..... 9 - 15
9.6.6 Saving the Current ST as Baseline ..... 9 - 15
9.6.7 Entering the ST Graphic Window ..... 9 - 16
9.6.8 Changing ST Settings ..... 9 - 16
9.6.9 Adjusting ST Measurement Points ..... 9 - 17
9.7 QT/QTc Interval Monitoring ..... 9 - 18
9.7.1 QT/QTc Monitoring Limitations ..... 9 - 19
9.7.2 Enabling QT/QTc Monitoring ..... 9 - 19
9.7.3 Displaying QT/QTc Numerics and Segments ..... 9 - 19
9.7.4 Entering the QT View ..... 9 - 20
9.7.5 Saving the Current QTc as Baseline ..... 9 - 21
9.7.6 Changing QT Settings ..... 9 - 21
9.8 ECG Relearning ..... 9 - 22
9.8.1 Auto ECG Relearning ..... 9 - 22
9.8.2 Manually Initiating an ECG Relearning ..... 9 - 22
9.9 Calibrating ECG ..... 9 - 23
9.10 Troubleshooting ..... 9 - 23
10 Monitoring Respiration ..... 10 - 1
10.1 Overview ..... 10 - 1
10.2 Starting the Monitoring ..... 10 - 1
10.3 Results Display ..... 10 - 3
10.4 Parameters Setup ..... 10 - 4
11 Monitoring Pulse Oxygen Saturation ..... 11 - 1
11.1 Overview ..... 11 - 1
11.2 Measurement Limitations ..... 11 - 2
11.3 Starting the Monitoring ..... 11 - 3
11.4 Results Display ..... 11 - 3

11.5 Parameters Setup ..... 11 - 5
11.5.1 SpO_2 Parameters ..... 11 - 5
11.5.2 PR Parameters ..... 11 - 6
11.6 Troubleshooting ..... 11 - 7

12 Monitoring Temperature ..... 12 - 1
12.1 Overview ..... 12 - 1
12.2 Starting the Measurement ..... 12 - 1
12.3 Results Display ..... 12 - 1
12.4 Parameters Setup ..... 12 - 2
12.5 Troubleshooting ..... 12 - 3

13 Monitoring Noninvasive Blood Pressure ..... 13 - 1
13.1 Overview ..... 13 - 1
13.2 NIBP Measurement Limitations ..... 13 - 2
13.3 Starting the Measurement ..... 13 - 2
13.4 Results Display ..... 13 - 4
13.5 Parameter Adjustment ..... 13 - 5
13.6 Correcting the NIBP Measurements ..... 13 - 6
13.7 NIBP Leakage Test ..... 13 - 7
13.8 NIBP Accuracy Test ..... 13 - 7

14 Infusion ..... 14 - 1
14.1 Safety Information ..... 14 - 1
14.2 Preparing the IV Container ..... 14 - 2
14.3 Loading the Infusion Set ..... 14 - 2
14.4 Purge ..... 14 - 3
14.5 Starting Infusion ..... 14 - 4
14.6 Using the Heating Control ..... 14 - 5
14.7 Completing Infusion ..... 14 - 7
14.8 Replacing the IV Container ..... 14 - 7
14.9 Unloading the Infusion Set ..... 14 - 7
14.10 Checking the Total Infusion Volume ..... 14 - 8

15 Monitoring Review ..... 15 - 1
15.1 Review Page ..... 15 - 1
15.1.1 Accessing the Review Page ..... 15 - 1
15.1.2 Example Review Page ..... 15 - 1
15.1.3 Symbols on Review Pages ..... 15 - 3
15.2 Common Operations ..... 15 - 3
15.2.1 Browsing Trend Data ..... 15 - 3
15.2.2 Viewing Events ..... 15 - 3
15.3 Tabular Trends Review Page ..... 15 - 3
15.3.1 Entering the Tabular Trends Review Page ..... 15 - 4
15.3.2 Changing the Tabular Trend Group ..... 15 - 4
15.3.3 Editing the Tabular Trend Group ..... 15 - 4
15.3.4 Changing the Resolution of Trend Data ..... 15 - 4
15.3.5 Printing a Tabular Trends Report ..... 15 - 4
15.4 Reviewing the Graphics Trends ..... 15 - 5

15.4.1 Entering the Graphic Trends Review Page ..... 15 - 5
15.4.2 Changing the Graphic Trend Group ..... 15 - 5
15.4.3 Editing the Graphic Trend Group ..... 15 - 5
15.4.4 Changing the Resolution of Trend Data ..... 15 - 5
15.4.5 Changing the Number of Waveforms ..... 15 - 5
15.4.6 Printing a Graphic Trends Report ..... 15 - 5
15.5 Reviewing Events ..... 15 - 6
15.5.1 Configuring the Filter ..... 15 - 6
15.5.2 Editing Events ..... 15 - 6
15.5.3 Viewing Event Details ..... 15 - 7
15.5.4 Printing Event Reports ..... 15 - 7
15.6 Reviewing Full Disclosure ..... 15 - 8
15.6.1 Selecting Waveforms ..... 15 - 8
15.6.2 Setting the Scale and Duration ..... 15 - 8
15.6.3 Viewing Details of Compressed Waveforms ..... 15 - 8
15.6.4 Printing the Full Disclosure Waveform Report ..... 15 - 9
15.7 ST Review Page ..... 15 - 9
15.7.1 Setting the ST Reference ..... 15 - 9
15.7.2 Displaying/Hiding the ST Reference ..... 15 - 9
15.7.3 Displaying/Hiding Markers ..... 15 - 9
15.7.4 Printing ST Data ..... 15 - 9
15.8 Reviewing Discharged Animals ..... 15 - 10
16 Monitoring Auxiliary Function ..... 16 - 1
16.1 Overview ..... 16 - 1
16.2 ECG 24h Summary ..... 16 - 1
16.2.1 Opening the ECG 24h Summary Window ..... 16 - 1
16.2.2 The Display of ECG 24h Summary ..... 16 - 2
16.2.3 Selecting Typical ECG Strips ..... 16 - 2
16.2.4 Setting the Statistical Duration of the ECG 24h Summary ..... 16 - 3
16.2.5 Reviewing the ECG Summary ..... 16 - 3
16.3 ECG Library ..... 16 - 3
16.3.1 Entering the ECG Library Screen ..... 16 - 3
16.3.2 The Display of ECG Library ..... 16 - 4
17 Printing ..... 17 - 1
17.1 Supported Printer ..... 17 - 1
17.2 End Case Reports ..... 17 - 1
17.2.1 Printing the End Case Report ..... 17 - 1
17.2.2 Setting a Report as An End Case Report ..... 17 - 1
17.2.3 Setting the End Case Report ..... 17 - 2
17.2.4 Setting the End Case Report Period ..... 17 - 2
17.3 Stopping a Printing Task ..... 17 - 2
17.4 Setting Reports ..... 17 - 3
17.4.1 Setting Realtime Reports ..... 17 - 3
17.4.2 Setting Tabular Trends Reports ..... 17 - 3
17.4.3 Setting Graphic Trends Reports ..... 17 - 3
17.5 Viewing Printer Status ..... 17 - 4

17.6 Printer Out of Paper ..... 17 - 4
18 Networked Monitoring ..... 18 - 1
18.1 Overview ..... 18 - 1
18.2 Safety Information ..... 18 - 1
18.3 Connecting to the CMS ..... 18 - 2
18.3.1 Connecting to the CMS through Wired Network ..... 18 - 2
18.3.2 Connecting to the CMS through Wireless Network ..... 18 - 3
18.4 Monitoring Animals via Video Through C-View ..... 18 - 3
19 Care and Cleaning ..... 19 - 1
19.1 Overview ..... 19 - 1
19.2 Safety Information ..... 19 - 1
19.3 Cleaning and Disinfection the Device ..... 19 - 2
19.3.1 Cleaning ..... 19 - 2
19.3.2 Disinfecting ..... 19 - 2
19.4 Cleaning the Water Tank ..... 19 - 3
19.5 Cleaning the Sponge Filter ..... 19 - 3
19.6 Cleaning Dust-Proof Meshes and Filters ..... 19 - 5
19.7 Cleaning and Disinfecting Accessories ..... 19 - 12
19.7.1 Cleaning ..... 19 - 13
19.7.2 Disinfecting ..... 19 - 13
19.8 Cleaning and Disinfecting Wireless Modules and Chargers ..... 19 - 13
19.8.1 Cleaning Wireless Modules ..... 19 - 13
19.8.2 Cleaning the Chargers ..... 19 - 14
19.8.3 Cleaning the Receiver ..... 19 - 14
19.8.4 Disinfecting ..... 19 - 14
19.9 Sterilization ..... 19 - 17
19.10 Impact of Improper Cleaning ..... 19 - 17
20 Maintenance ..... 20 - 1
20.1 Overview ..... 20 - 1
20.2 Safety Information ..... 20 - 1
20.3 Maintenance and Testing Schedule ..... 20 - 2
20.4 Testing Methods and Procedures ..... 20 - 3
20.4.1 Performing Visual Inspection ..... 20 - 3
20.4.2 Performing Power-on Test ..... 20 - 4
20.4.3 Testing the Network Printer ..... 20 - 4
20.4.4 Maintaining the Battery ..... 20 - 4
20.5 Disposing of the device ..... 20 - 5
A Accessories ..... A - 1
A.1 ECG Accessories ..... A - 2
A.2 SpO_2 Accessories ..... A - 2
A.3 NIBP Accessories ..... A - 2
A.4 Temp Accessories ..... A - 3
A.5 Wireless Monitoring Modules ..... A - 3
A.6 Other Accessories ..... A - 4
B Product Specifications ..... B - 1

B.1 Safety Specifications ..... B - 1
B.2 Environmental Specifications ..... B - 1
B.3 Main Unit ..... B - 2
B.3.1 Power Supply Specifications ..... B - 2
B.3.2 Battery Specifications ..... B - 3
B.3.3 AC Power Auxiliary Outputs ..... B - 3
B.3.4 Physical Specifications ..... B - 3
B.3.5 Hardware Specifications ..... B - 4
B.3.6 Data Storage ..... B - 5
B.3.7 Wi-Fi Specifications ..... B - 5
B.4 Wireless Monitoring Modules ..... B - 7
B.4.1 Power Supply Specifications ..... B - 7
B.4.2 Physical Specifications ..... B - 8
B.4.3 Hardware Specifications ..... B - 9
B.4.4 Wi-Fi Specifications ..... B - 10
B.5 Measurement Specifications ..... B - 11
B.5.1 ECG Specifications ..... B - 12
B.5.2 Resp Specifications ..... B - 16
B.5.3 SpO_2 Specifications ..... B - 16
B.5.4 PR Specifications ..... B - 17
B.5.5 NIBP Specifications ..... B - 18
B.5.6 Temp Specifications ..... B - 19
B.6 Infusion Pump ..... B - 20
B.6.1 Infusion Control ..... B - 20
B.6.2 Recommended Infusion Sets ..... B - 21
B.6.3 Infusion Warmer ..... B - 21
B.6.4 Occlusion Alarm Delay and Bolus Volume ..... B - 21
B.6.5 Infusion Accuracy Graphs ..... B - 22
B.7 Environment Specifications ..... B - 25

C EMC Guidance and Manufacturer's Declaration ..... C - 1

D Alarm Messages ..... D - 1

D.1 Monitoring Alarm Messages ..... D - 1
D.1.1 Physiological Alarms ..... D - 1
D.1.2 Technical Alarms ..... D - 4
D.2 Infusion Module Alarm Messages ..... D - 9
D.3 Environment Module Alarm Messages ..... D - 12
D.4 System Technical Alarm Messages ..... D - 19

E Default Settings ..... E - 1

E.1 Monitoring Default Settings ..... E - 1
E.1.1 ECG Default Settings ..... E - 1
E.1.2 ST Default Settings ..... E - 2
E.1.3 Arrhythmia Default Settings ..... E - 3
E.1.4 QT/QTc Default Settings ..... E - 6
E.1.5 Respiration Default Settings ..... E - 7
E.1.6 SpO_2 Default Settings ..... E - 7

E.1.7 Temperature Default Settings ..... E - 8
E.1.8 NIBP Default Settings ..... E - 8
E.1.9 Review Default Settings ..... E - 9
E.1.10 Report Default Settings ..... E - 10
E.2 Infusion Default Settings ..... E - 10
E.2.1 Infusion Control ..... E - 10
E.2.2 Heating Control ..... E - 10
E.2.3 Environment Default Settings ..... E - 11
E.3 System Default Settings ..... E - 11
E.3.1 Audio and Display ..... E - 11
E.3.2 Night Mode ..... E - 12
E.3.3 General Maintenance ..... E - 12
E.3.4 Monitoring Maintenance ..... E - 14
E.3.5 Infusion Maintenance ..... E - 14
E.3.6 Environment Maintenance ..... E - 15

F Electrical Safety Inspection ..... F - 1

F.1 Power Cord Plug ..... F - 1
F.1.1 The Power Plug ..... F - 1
F.2 Device Enclosure and Accessories ..... F - 2
F.2.1 Visual Inspection ..... F - 2
F.2.2 Contextual Inspection ..... F - 2
F.3 Device Labeling ..... F - 2
F.4 Protective Earth Resistance ..... F - 2
F.5 Earth Leakage Test ..... F - 3
F.6 Touch Current ..... F - 3
F.7 Patient Leakage Current ..... F - 3
F.8 Mains on Applied Part Leakage ..... F - 4
F.9 Patient Auxiliary Current ..... F - 4

G Terms ..... G - 1

H Declaration of Conformity ..... H - 1

1 Safety Information

1.1 Warnings

WARNING

- Only properly trained or fully qualified personnel are authorized to operate this device.
- The device and monitoring accessories are suitable for use within the animal environment. For other equipment and accessories connected to the device, consult corresponding manufacturers for the suitability within the animal environment.
- If it is not evident from the device specifications whether a particular combination with other devices is hazardous, for example, due to summation of leakage currents, please consult an expert in the field, the Customer Service Department or your local distributor. A determination must be made that the proposed combination will not negatively affect the devices themselves or the animal's safety.
- The device is not intended to be used within the Magnetic Resonance (MR) environment.
- The software copyright of the device is solely owned by Mindray Animal Medical. No organization or individual shall resort to modifying, copying, or exchanging it or to any other infringement on it in any form or by any means without due permission.
- Physiological data and alarm messages provided by the device should not be used as the only basis for diagnosis or therapy decisions. They must be used in conjunction with clinical signs and symptoms. Misinterpreting measured values or other parameters may result in animal hazards.
- This device is used for single animal at a time.
- Do not move the device after installation or stacking.
- Components not specified in this manual should not be connected to the device.
- Do not use the device if you suspect it is not working properly, or if it is mechanically damaged. Contact the Customer Service Department or your local distributor.
- Do not open the device housings. All servicing and future upgrades must be carried out by trained and authorized personnel.
- To avoid explosion hazard, do not use the device in the presence of oxygen-rich atmospheres, flammable anesthetics, or other flammable agents.
- Do not use the multiple portable socket outlets (MPSO) or AC mains extension cords. Ensure that the sum of the individual ground leakage currents does not exceed the allowable limits.
- Do not touch the animal and live parts simultaneously. Otherwise animal injury may result.

- Pay close attention to the connected status to prevent animal data error or loss.
- Keep close observation on the device connection status during patient monitoring, in case patient data loss or errors occur.
- Use only installation accessories specified by Mindray Animal Medical.
- Do not loop the animal cabling into a tight coil or wrap around the device, as this can damage the animal cabling.
- If the accuracy of any value displayed on the device, CMS system, or printed on a graph strip or report is questionable, determine the animal's vital signs by alternative means. Verify that all devices are working correctly.
- Before use, the user must check the device, connection cables and accessories to ensure normal and safe operation.
- Devices connected to this device must meet the requirements of the IEC standards (e.g. IEC 62368-1 safety standards for information technology equipment and IEC 60601-1 safety standards for medical electrical equipment). The configurations of the devices must meet the requirements of the IEC 60601-1 medical electrical systems standard. Any personnel who connect devices to this device's signal input/output port is responsible for providing evidence that the safety certification of the devices has been performed in accordance to the IEC 60601-1. If you have any questions, contact the Customer Service Department or your local distributor.
- Customize alarm settings according to animal situations and keep animals under close surveillance.
- To avoid electric shock, do not touch animal and other non-defibrillation proof equipment during defibrillation. Defibrillation will not affect the performance of the device.
- Do not touch the auxiliary output mains plug with wet hand. Eliminate the liquid or any residue inside of or at the surroundings of the AC power input connector and power cord connectors.
- To avoid the risk of electric shock, connect the device to the protective earth power supply network.
- No modification of this device is allowed.
- Possible risk of electric shock. The device can only be serviced by authorized service personnel.
- All gas supplies should be of medical grade.
- The device and its accessories shall not be served or maintained while in use with an animal.
- Ensure that the current alarm presets are appropriate before use on each animal.
- A hazard may exist if different alarm presets are used for the same or similar device in any single area.
- Due to the dimensions and weight of the device, it should only be moved by qualified personnel.
- Overloading device may cause tipping. Equipment attached to the side of the device should be within the rated weights to prevent dumping of the device.
- Do not touch the animal when connecting external devices via the I/O signal ports to prevent patient leakage current from exceeding the requirements specified by the standard.

1.2 Cautions

CAUTION

- The device should be installed by the authorized personnel.
- Do not collide with the radiator assembly on the bottom of the analyzer during transportation and cleaning to avoid damage.

- The device may be subject to microbacteria contamination during storage, transport, or use. Prior to use, please verify that the packages are intact, especially the packages of single use accessories. In case of any damage, do not apply it to animals.
- Dry the device immediately in case of rain or water spray.
- Some settings are password protected and can only be changed by authorized personnel. Contact the Customer Service Department or your distributor for the passwords used at your facility.
- Magnetic and electrical fields are capable of interfering with the proper performance of the device. For this reason, ensure that all external equipment operated in the vicinity of the device comply with the relevant EMC requirements. Mobile phone, X-ray equipment or MRI devices are a possible source of interference as they may emit higher levels of electromagnetic radiation.
- The device may not meet the performance specifications if stored or used outside the specified temperature and humidity ranges. If the performance of the device is degraded due to aging or environmental conditions, contact the Customer Service Department or your local distributor.
- Observance of this manual is a prerequisite for proper product performance and correct operation and ensures animal and operator safety.
- Always install or carry the device properly to avoid damage caused by drop, impact, strong vibration or other mechanical force. The device should be observed to verify normal operation after fall, otherwise it cannot be used.
- Ensure that the device is supplied with continuous electric power during work. Sudden power failure may cause data loss.
- Check and ensure that the wireless monitoring modules have sufficient charge before use.
- At the end of its service life, the device, as well as its accessories, must be disposed of in compliance with the guidelines regulating the disposal of such products. If you have any questions concerning disposal of the device, please contact the Customer Service Department or your local distributor.
- Dispose of the package material as per the applicable waste control regulations. Keep it out of children’s reach.
- The animal should be placed in a specified area. If the animal is at the edge of or outside the network coverage range, unstable network connection may compromise the monitoring performance.
- Do not step on the floor when operating the device.
- Do not use the cabin door as a force structure. When opening and closing the cabin door, pay attention to the surrounding conditions to avoid collision or pinch.
- No heavy objects shall be placed on top of the device except for those specified by Mindray Animal Medical.
- Do not hit the cabin door glass with hard or sharp objects.
- If the device does not function as described, it must be examined and repaired as necessary by qualified service personnel before being put back to use.
- Ensure that the gas supply of the device always complies with the technical specifications.
- Before clinical use, the device must be correctly calibrated and/or the respective tests must be performed, as described in this manual.
- After servicing, functional, sensor, and system tests must be performed before clinical use.
- The voltage on the auxiliary outlets should be the same voltage as the outlet into which the device is plugged. Ensure that equipment plugged into the auxiliary outlets is rated for the same supply voltage as the device.

1.3 Notes

NOTE

- The software is developed in compliance with IEC 62304.
- If the device is powered off abnormally and then powered on again, the device behaves the same as it is normally turned off.
- This manual includes information related to all features of the device. Some features may not be available on your device.
- Save the packing case and packaging material as they can be used if the device must be reshipped.
- Install the device in a place that facilitates observation, operation, and maintenance. The intended location for the device where users can touch with hands.
- When stored under temperature conditions beyond the defined operating conditions, the device needs to be placed under room temperature at least 1 hour before use.
- In normal use, the operator is expected to be in front of the device.

2 Product Overview

2.1 Intended Use

It is intended to provide a medical care environment with temperature, humidity, and oxygen (O_2) concentration control for critical, weak, or newborn animals. It is also used for monitoring of physiological parameters including electrocardiogram (ECG), heart rate (HR), respiration (Resp), temperature (Temp), pulse oxygen saturation (SpO_2), pulse rate (PR), and non-invasive blood pressure (NIBP); infusion therapy; and monitoring of carbon dioxide (CO_2) concentration inside the device.

This device is applicable to critical emergency treatment, postoperative recovery, cardiopulmonary disease, aged animal care, and mother and infant care.

This device must be used by clinically trained medical personnel.

2.2 Contraindications

Not identified yet.

2.3 Introduction to Each Unit

2.3.1 ViCare U7

Figure 2-1 Front view

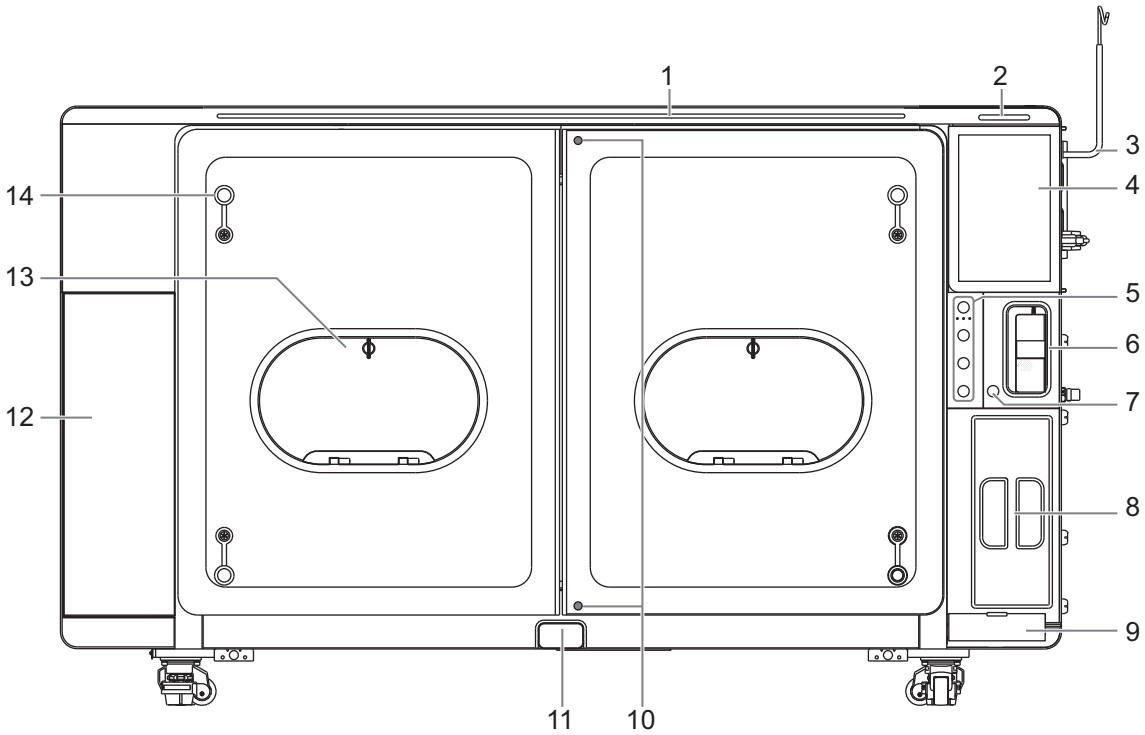

No.	Name	Description
1.	Nursing Level Indicator	Indicates the current animal's level of care with different colors.
2.	Alarm Lamp	When a physiological alarm or technical alarm occurs, this lamp lights and flashes corresponding with the alarm priority.
3.	Infusion Set Hook	Used for hanging the infusion bag.
4.	Touch Screen	Screen-touching operator-system interface or control.

No.	Name	Description
5.	Control Panel	(Power Button): Press to turn on/off the device.
		(Alarm Reset Button): Press to reset the alarm system.
		(Lamp Button): Press to turn on/off the light in the device.
		(Ventilation Button): Press to turn on/off the emergency vents and fans.
		(AC Power Indicator): • On: the AC power supply is connected. • Off: when the AC power is not connected.
		(Power indicator): • On: when the device is turned on. • Off: when the device is turned off.
		(Battery Indicator): • Steady Green: the battery is fully charged or being charged. • Flashing Green: the device operates by battery power. • Off: no battery is installed, or the battery is malfunctioning, or the device is powered off and no power is connected.
6.	Built-in Infusion Pump	Open the pump door to load or unload the infusion set.
7.	（Infusion Stop Button）	Press to stop the infusion.
8.	CO2 Absorber Canister	Used for holding the CO2 absorbent. Inspect the color of the soda lime in the canister. Replace the soda lime immediately if obvious color change is detected.
9.	Infusion Warmer	Built-in infusion warmer module, used for heating the fluid or drug in the infusion tubing.
10.	Emergency Door Screw (2)	Used for opening the cabin door in case of emergency. For emergency use only.
11.	Door Open Button	Used for opening the cabin door.
12.	Storage Compartment	Used for temporal storage.
13.	Operation Window	Used for animal care inside the device.
14.	Multi-function Operation Hole	Used for routing infusion tubes and cables, and connecting to the nebulizer. In case of emergency ventilation, it can also be fully opened to form air convection.

Figure 2-2 Right View

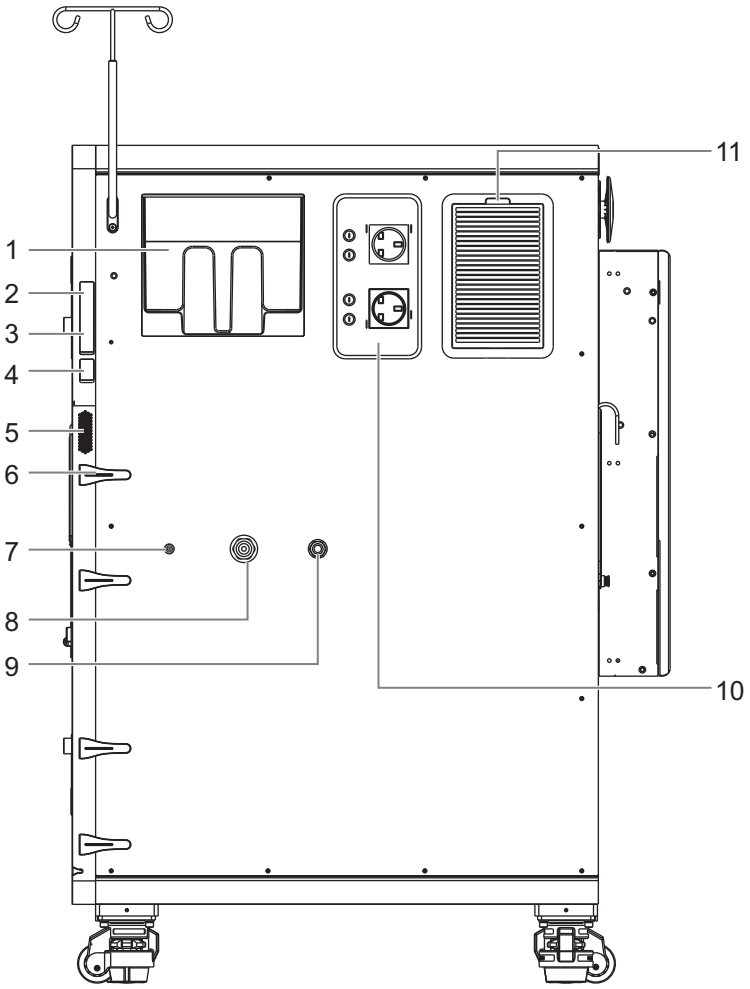

No.	Name	Description
1.	Water Tank	Used for filling purified water for humidification.
2.	Data Transmission Ports	Used for connecting external I/O devices.
3.	Video Output Port	Used for connecting the external display
4.	USB Ports	Used for connecting USB devices.
5.	Speaker	Outputs the audio.
6.	Cable Management Clamp	Used for arranging cables and tubes.
7.	Nebulizer Connector	Used for connecting a nebulizer.
8.	High-Pressure Oxygen Supply Connector	Used for connecting the high-pressure oxygen supply.

No.	Name	Description
9.	Low-Pressure Oxygen Supply Connector	Used for connecting the low-pressure oxygen supply.
10.	AC Power Auxiliary Outputs	Used for supplying power for optional peripheral devices.
11.	Dust-Proof Mesh	Used for filtering dust and hair.

Figure 2-3 Rear view

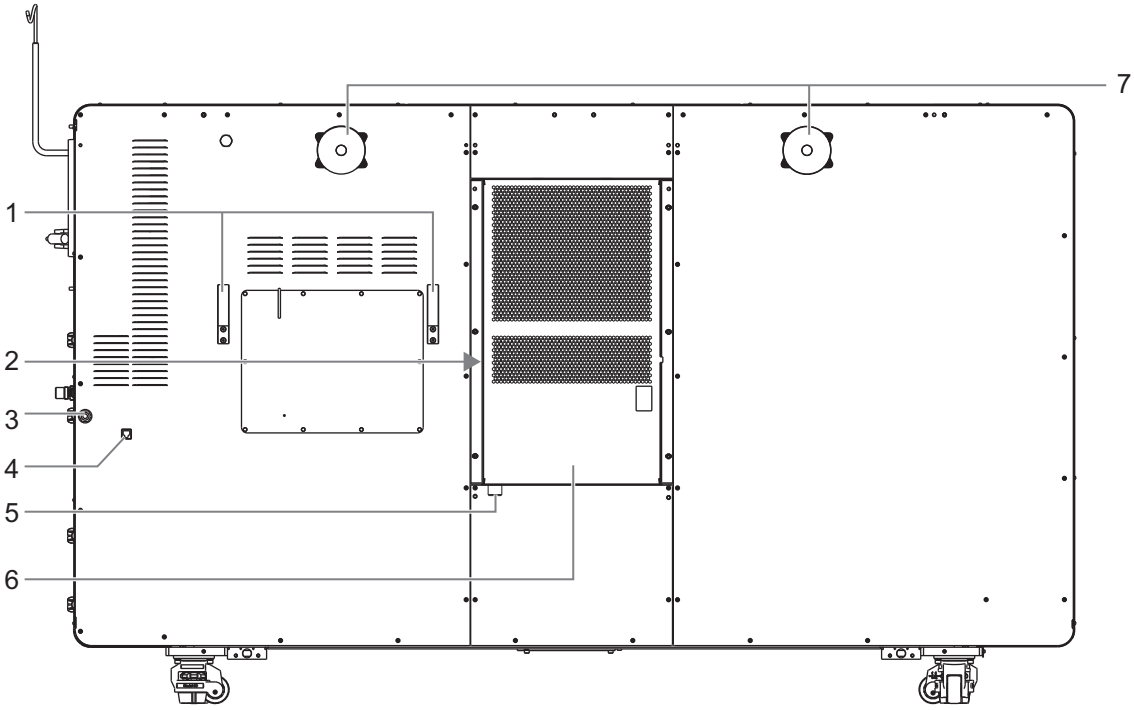

No.	Name	Description
1.	Cable Hooks	Used for arranging cables.
2.	A/C Dust-Proof Mesh	Used for filtering dust and hair.
3.	Drain Connector	Used for connecting drain tubes or containers.
4.	Network Port	Used for connecting the wired network.
5.	A/C Drain Connector	Used for connecting drain tubes or containers.
6.	Air Conditioner	Used for control the temperature conditions inside the device.
7.	Vent	Used for cooling the main unit.

2.3.2 ViCare U7L

Figure 2-4 Front view

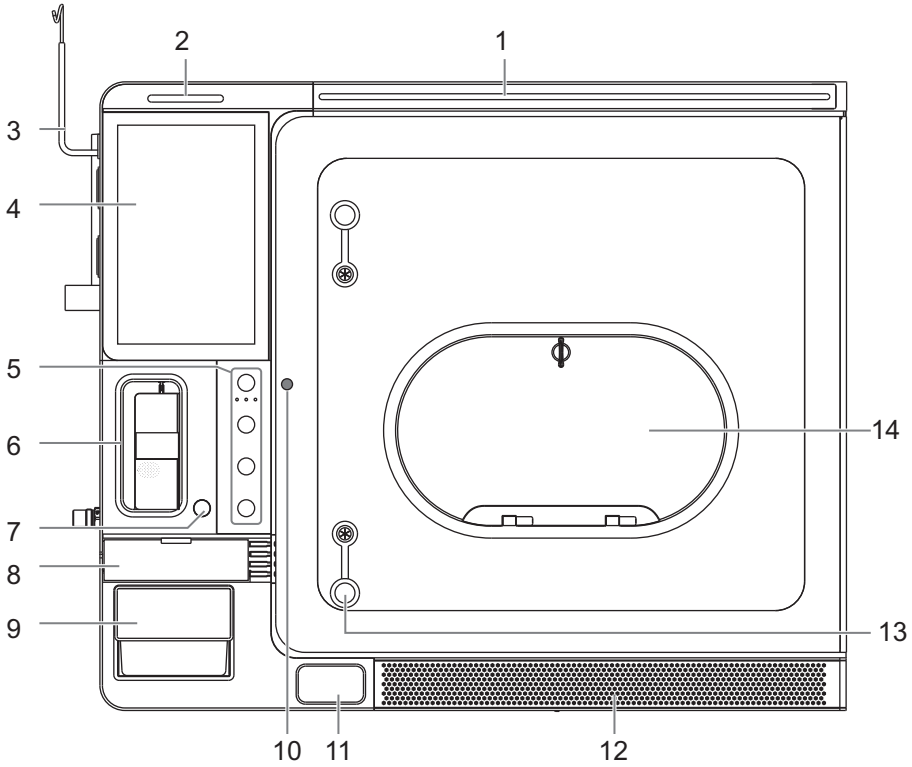

No.	Name	Description
1.	Nursing Level Indicator	Indicates the current animal's level of care with different colors.
2.	Alarm Lamp	When a physiological alarm or technical alarm occurs, this lamp lights and flashes corresponding with the alarm priority.
3.	Infusion Set Hook	Used for hanging the infusion bag.
4.	Touch Screen	Screen-touching operator-system interface or control.

No.	Name	Description
5.	Control Panel	(Power Button): Press to turn on/off the device.
		(Alarm Reset Button): Press to reset the alarm system.
		(Lamp Button): Press to turn on/off the light in the device.
		(Ventilation Button): Press to turn on/off the emergency vents and fans.
		(AC Power Indicator): • On: the AC power supply is connected. • Off: when the AC power is not connected.
		(Power indicator): • On: when the device is turned on. • Off: when the device is turned off.
		(Battery Indicator): • Steady Green: the battery is fully charged or being charged. • Flashing Green: the device operates by battery power. • Off: no battery is installed, or the battery is malfunctioning, or the device is powered off and no power is connected.
6.	Built-in Infusion Pump	Open the pump door to load or unload the infusion set.
7.	（Infusion Stop Button）	Press to stop the infusion.
8.	Infusion Warmer	Built-in infusion warmer module, used for heating the fluid or drug in the infusion tubing.
9.	CO2 Absorber Canister	Used for holding the CO2 absorbent. Inspect the color of the soda lime in the canister. Replace the soda lime immediately if obvious color change is detected.
10.	Emergency Door Screw	Used for opening the cabin door in case of emergency. For emergency use only.
11.	Door Open Button	Used for opening the cabin door.
12.	Dust-Proof Mesh	Used for filtering dust and hair.
13.	Multi-function Operation Hole	Used for routing infusion tubes and cables, and connecting to the nebulizer. In case of emergency ventilation, it can also be fully opened to form air convection.
14.	Operation Window	Used for animal care inside the device.

Figure 2-5 Left view

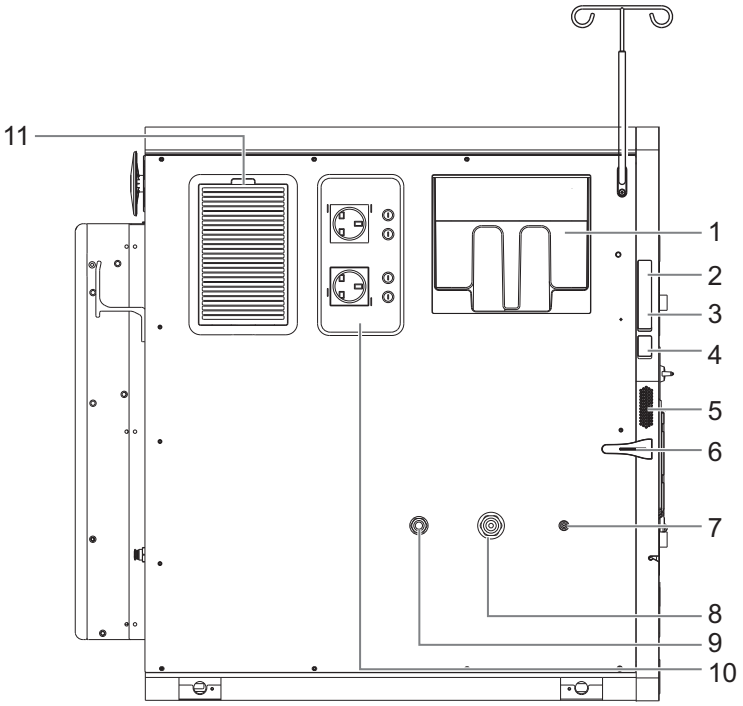

No.	Name	Description
1.	Water Tank	Used for filling purified water for humidification.
2.	Data Transmission Ports	Used for connecting external I/O devices.
3.	Video Output Port	Used for connecting the external display
4.	USB Ports	Used for connecting USB devices.
5.	Speaker	Outputs the audio.
6.	Cable Management Clamp	Used for arranging cables and tubes.
7.	Nebulizer Connector	Used for connecting a nebulizer.
8.	High-Pressure Oxygen Supply Connector	Used for connecting the high-pressure oxygen supply.
9.	Low-Pressure Oxygen Supply Connector	Used for connecting the low-pressure oxygen supply.
10.	AC Power Auxiliary Outputs	Used for supplying power for optional peripheral devices.
11.	Dust-Proof Mesh	Used for filtering dust and hair.

Figure 2-6 Rear view

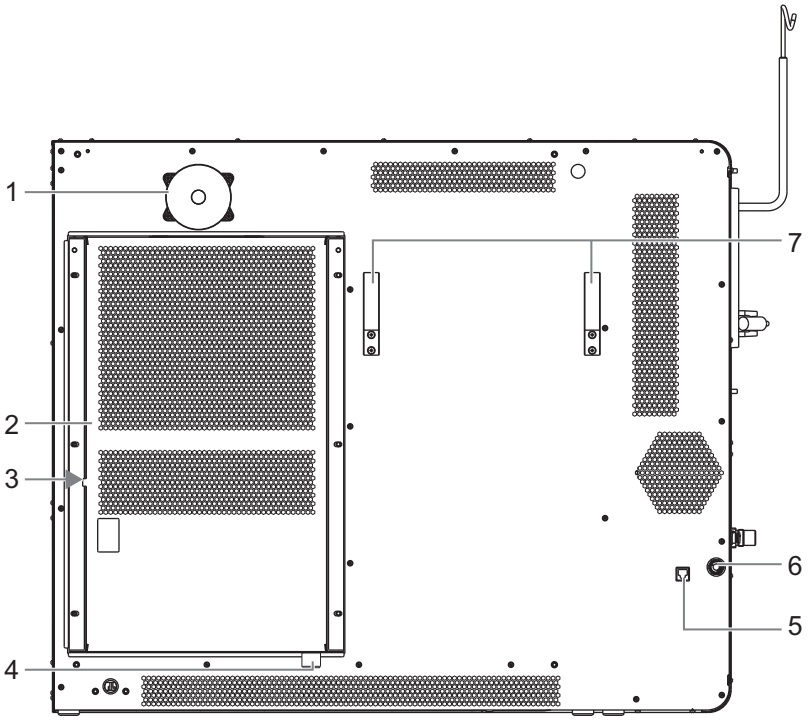

No.	Name	Description
1.	Vent	Used for cooling the main unit.
2.	Air Conditioner	Used for control the temperature conditions inside the device.
3.	A/C Dust-Proof Mesh	Used for filtering dust and hair.
4.	A/C Drain Connector	Used for connecting drain tubes or containers.
5.	Network Port	Used for connecting the wired network.
6.	Drain Connector	Used for connecting drain tubes or containers.
7.	Cable Hooks	Used for arranging cables.

2.3.3 ViCare U7R

Figure 2-7 Front view

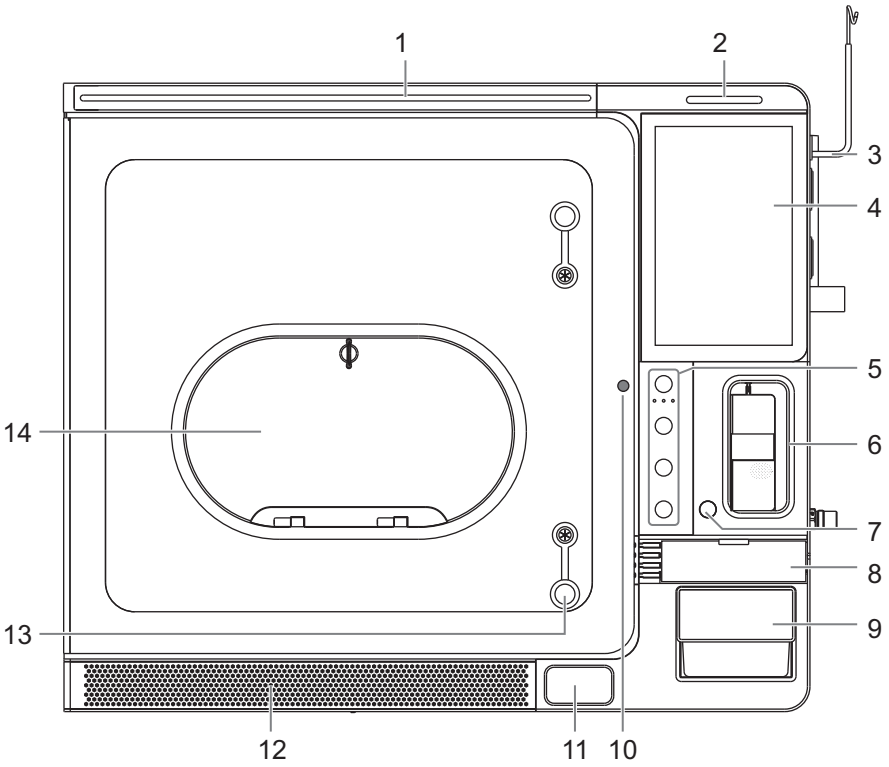

No.	Name	Description
1.	Nursing Level Indicator	Indicates the current animal's level of care with different colors.
2.	Alarm Lamp	When a physiological alarm or technical alarm occurs, this lamp lights and flashes corresponding with the alarm priority.
3.	Infusion Set Hook	Used for hanging the infusion bag.
4.	Touch Screen	Screen-touching operator-system interface or control.

No.	Name	Description
5.	Control Panel	(Power Button): Press to turn on/off the device.
		(Alarm Reset Button): Press to reset the alarm system.
		(Lamp Button): Press to turn on/off the light in the device.
		(Ventilation Button): Press to turn on/off the emergency vents and fans.
		(AC Power Indicator): • On: the AC power supply is connected. • Off: when the AC power is not connected.
		(Power indicator): • On: when the device is turned on. • Off: when the device is turned off.
		(Battery Indicator): • Steady Green: the battery is fully charged or being charged. • Flashing Green: the device operates by battery power. • Off: no battery is installed, or the battery is malfunctioning, or the device is powered off and no power is connected.
6.	Built-in Infusion Pump	Open the pump door to load or unload the infusion set.
7.	（Infusion Stop Button）	Press to stop the infusion.
8.	Infusion Warmer	Built-in infusion warmer module, used for heating the fluid or drug in the infusion tubing.
9.	CO2 Absorber Canister	Used for holding the CO2 absorbent. Inspect the color of the soda lime in the canister. Replace the soda lime immediately if obvious color change is detected.
10.	Emergency Door Screw	Used for opening the cabin door in case of emergency. For emergency use only.
11.	Door Open Button	Used for opening the cabin door.
12.	Dust-Proof Mesh	Used for filtering dust and hair.
13.	Multi-function Operation Hole	Used for routing infusion tubes and cables, and connecting to the nebulizer. In case of emergency ventilation, it can also be fully opened to form air convection.
14.	Operation Window	Used for animal care inside the device.

Figure 2-8 Right view

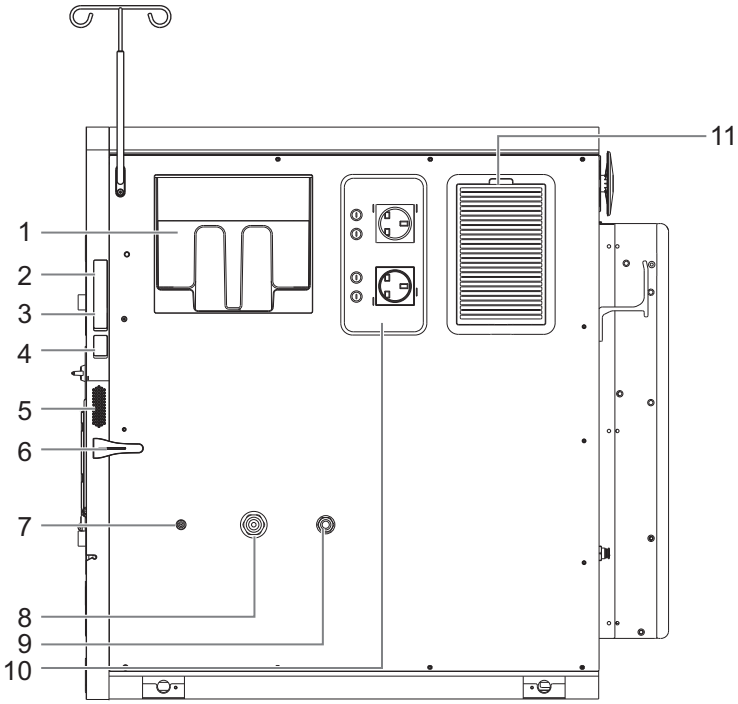

No.	Name	Description
1.	Water Tank	Used for filling purified water for humidification.
2.	Data Transmission Ports	Used for connecting external I/O devices.
3.	Video Output Port	Used for connecting the external display
4.	USB Ports	Used for connecting USB devices.
5.	Speaker	Outputs the audio.
6.	Cable Management Clamp	Used for arranging cables and tubes.
7.	Nebulizer Connector	Used for connecting a nebulizer.
8.	High-Pressure Oxygen Supply Connector	Used for connecting the high-pressure oxygen supply.
9.	Low-Pressure Oxygen Supply Connector	Used for connecting the low-pressure oxygen supply.
10.	AC Power Auxiliary Outputs	Used for supplying power for optional peripheral devices.
11.	Dust-Proof Mesh	Used for filtering dust and hair.

Figure 2-9 Rear view

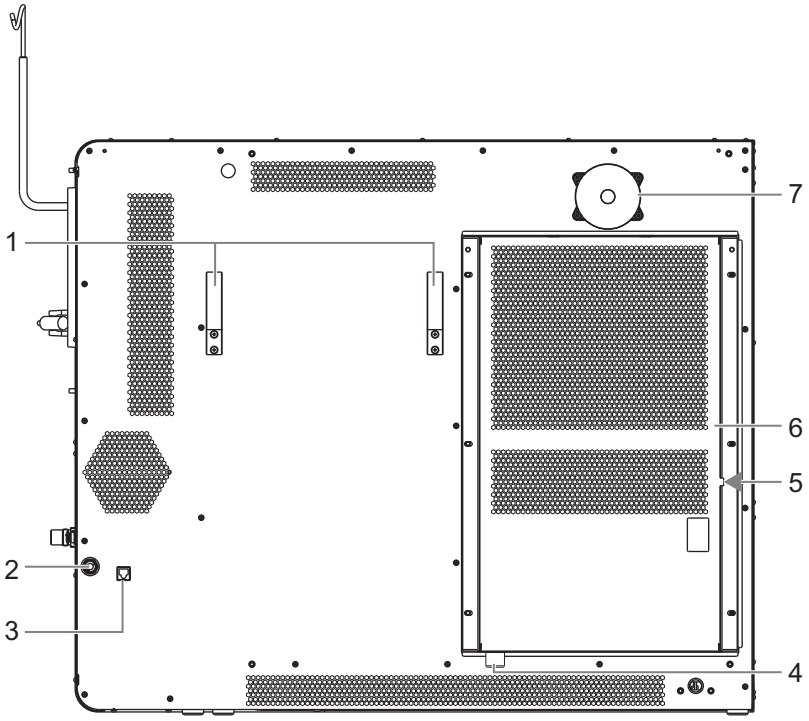

No.	Name	Description
1.	Cable Hooks	Used for arranging cables.
2.	Drain Connector	Used for connecting drain tubes or containers.
3.	Network Port	Used for connecting the wired network.
4.	A/C Drain Connector	Used for connecting drain tubes or containers.
5.	A/C Dust-Proof Mesh	Used for filtering dust and hair.
6.	Air Conditioner	Used for control the temperature conditions inside the device.
7.	Vent	Used for cooling the main unit.

2.4 Wireless Monitoring Modules

2.4.1 SpO_2 Module (MAS30)

Figure 2-10 SpO_2 module

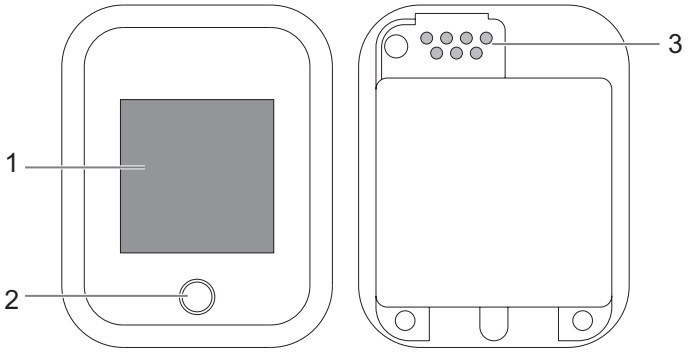

No.	Name	Description
1.	Display screen	Displays ECG, SpO_2, blood pressure, temperature parameters, connection status, and so on.
2.	Touch button	• On a black screen, press the button to wake the screen up. • On a working screen, press the button to switch between different interfaces.
3.	Contacts	Used for connecting the Temp module.

2.4.2 Temp Module (MAT30)

Figure 2-11 Temp module

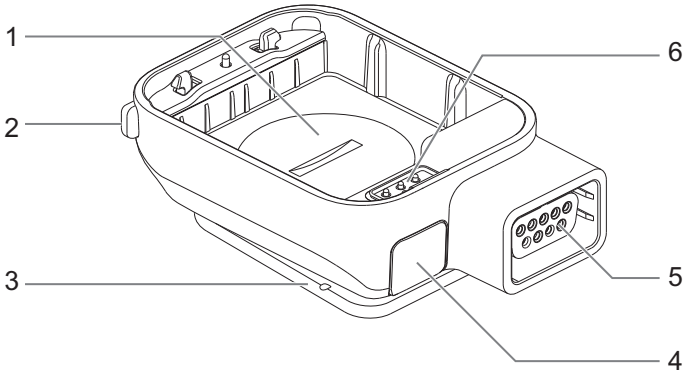

No.	Name	Description
1.	Battery compartment of Temp module	Used for powering the Temp module.
2.	Release button	Press to unlock the SpO_2 module and Temp module.
3.	Clip	Used for fixing the NIBP module.

No.	Name	Description
4.	Temperature probe connector	Used for connecting the temperature probe
5.	SpO_2 sensor connector	Used for connecting the SpO_2 sensor.
6.	Contacts	Used for connecting the SpO_2 module.

2.4.3 ECG module (MAE30)

Figure 2-12 ECG module and ECG lead

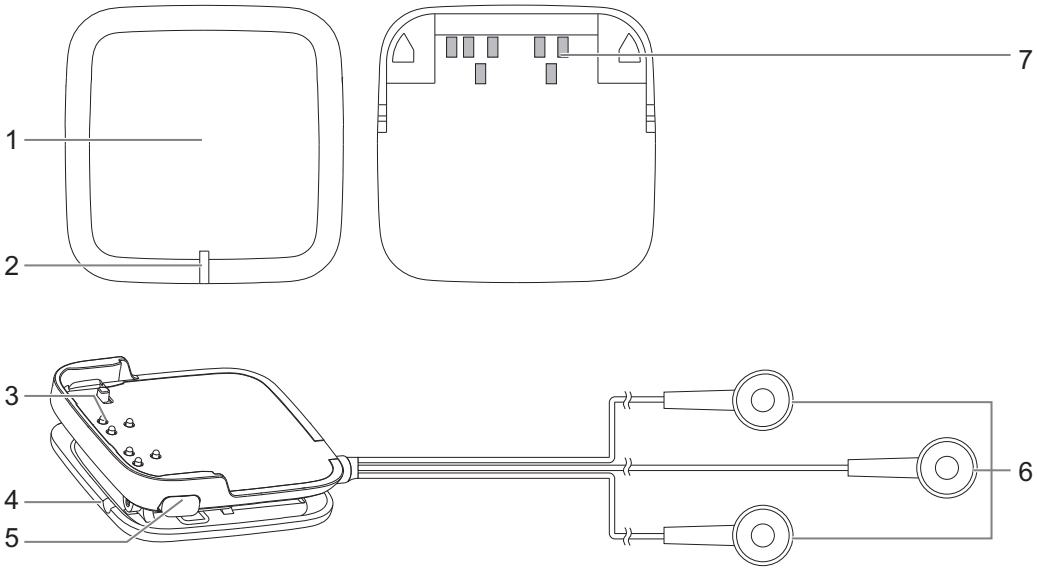

No.	Name	Description
1.	ECG module	Used for connecting the ECG lead and transmitting ECG monitoring signal.
2.	Status indicator	When connected with an ECG lead: • Lighting up in green and then off: the ECG module is paired successfully and starts working. • Flashing green: the ECG module is searching the device to be paired.
		When installed on the charger: • Flashing green: the battery is being charged. • Green: the battery is fully charged. • Yellow: error occurred during charging. • Off: the charger is not connected to the AC power, or the charger is malfunctioning.
3.	Contacts	Used for connecting the ECG Module.
4.	Clip	Used for fixing the ECG module.
5.	Release button	Press to unlock the ECG lead and the ECG module.
6.	ECG electrodes	Used for installing electrode pads.
7.	Contacts	Used for connecting the ECG lead.

2.4.4 NIBP Module (MAB30)

Figure 2-13 NIBP module

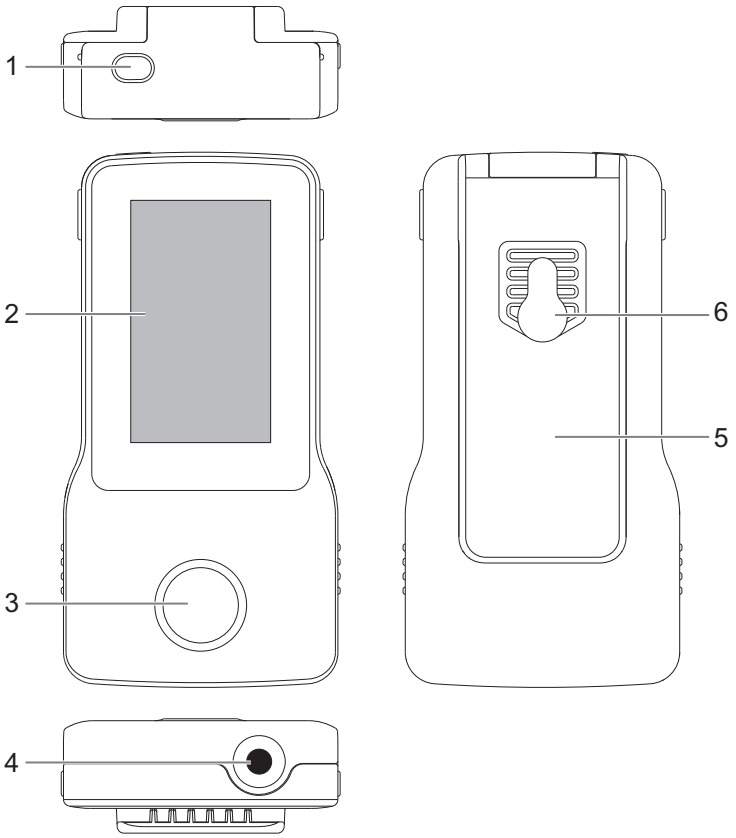

No.	Name	Description
1.	Power on/off button	• After a battery is installed and when the NIBP module is off: press to turn on the NIBP module. • When the NIBP module is on: press and hold to turn off the NIBP module.
2.	Display	Displays the measurement results.
3.	Start/Stop button	Press to start/stop NIBP measurement.
4.	NIBP hose connector	Used for connecting the NIBP air hoses.
5.	Clip	Fix the blood pressure module.
6.	Installation hole	Used for hanging the NIBP module.

2.4.5 Receiver Module (R20)

Figure 2-14 Receiver module

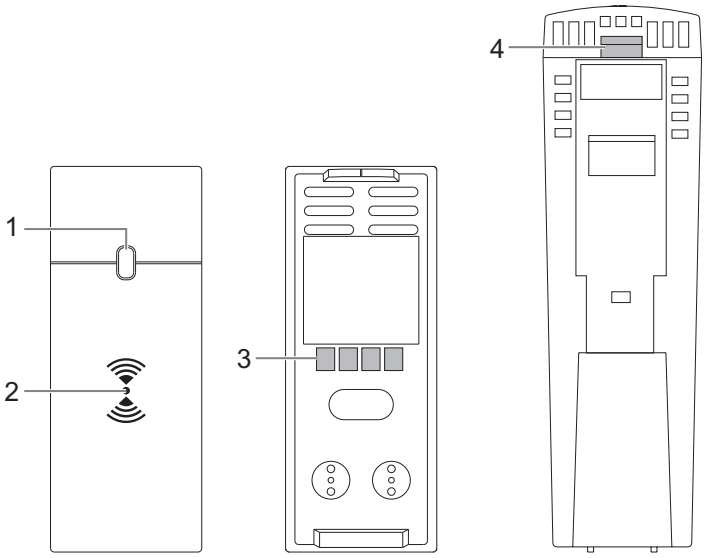

No.	Name	Description
1.	Status indicator	• On: the SpO_2 module has established Bluetooth connection with the device • Flashing: the receiver works properly but has no Bluetooth connection with an SpO_2 module. • Off: the receiver is not properly installed or is malfunctioning.
2.	Pairing area	Place the SpO_2 module close to the sensing region for pairing.
3.	Contacts (rear panel)	Used for transmitting data or charge the battery. Avoid touching the contacts during operation.
4.	Release button (bottom panel)	Press to unlock and disconnect the receiver from the device.

2.4.6 Chargers

Figure 2-15 C10 Charger

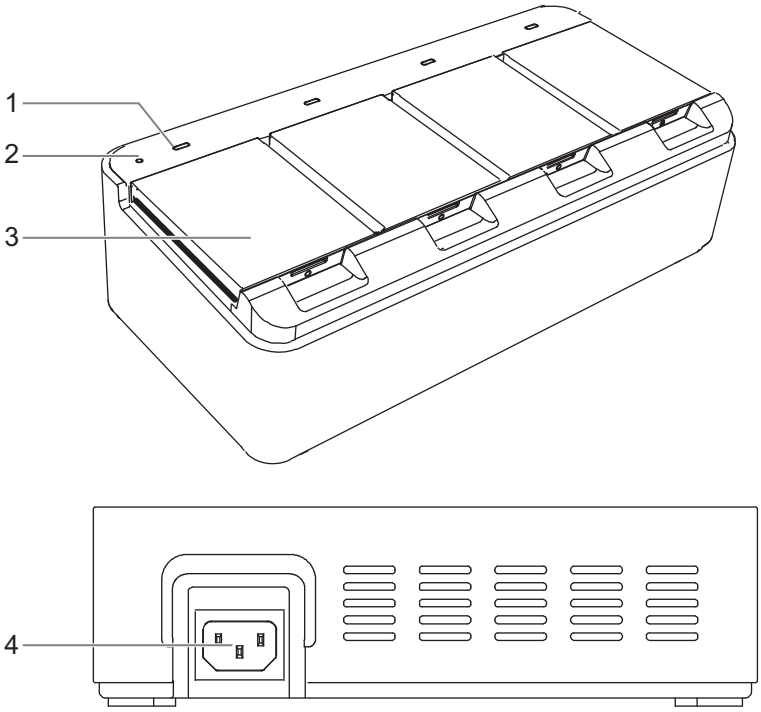

No.	Name	Description
1.	Status indicator for the batteries of NIBP modules	• Steady yellow: the battery is being charged. • Flashing yellow: a charging failure occurs. • Steady green: the battery is fully charged. • Off: the battery is not properly connected or the charger is not connected to the AC power supply.
2.	AC Power indicator	• On: AC power is connected. • Off: no AC power is connected.
3.	Charing slot	Used for installing the batteries for charging.
4.	AC power socket	Used for connecting to the AC power supply.

Figure 2-16 C25 Charger

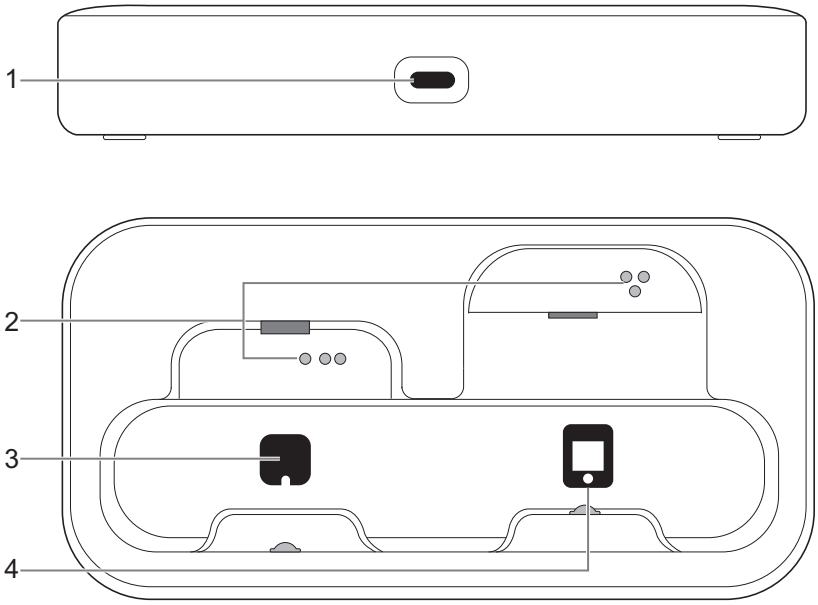

No.	Name	Description
1.	USB Type-C connector	Used for connecting a USB Type-C cable for power input.
2.	Contacts	Used for charging the battery. Avoid touching the contacts during operation.
3.	Charging slot for the ECG module	Used for installing the ECG module for charging.
4.	Charging slot for the SpO_2 module	Used for installing the SpO_2 module for charging.

2.5 Portable Storage Bag

Figure 2-17 Portable Storage Bag

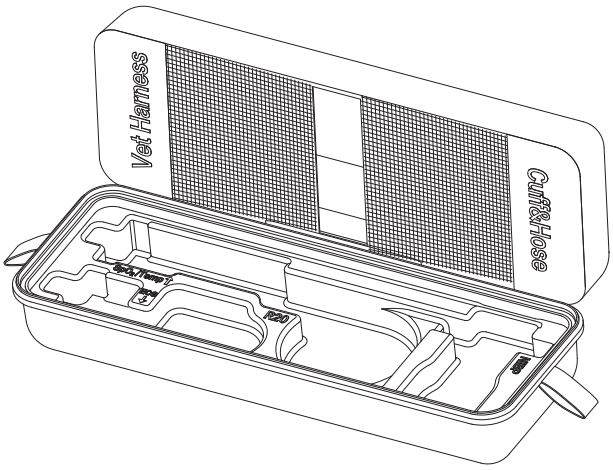

Pull the zipper to open the accessory storage bag, and store the accessories according to the label areas.

2.6 Screen Display

Figure 2-18 Main screen

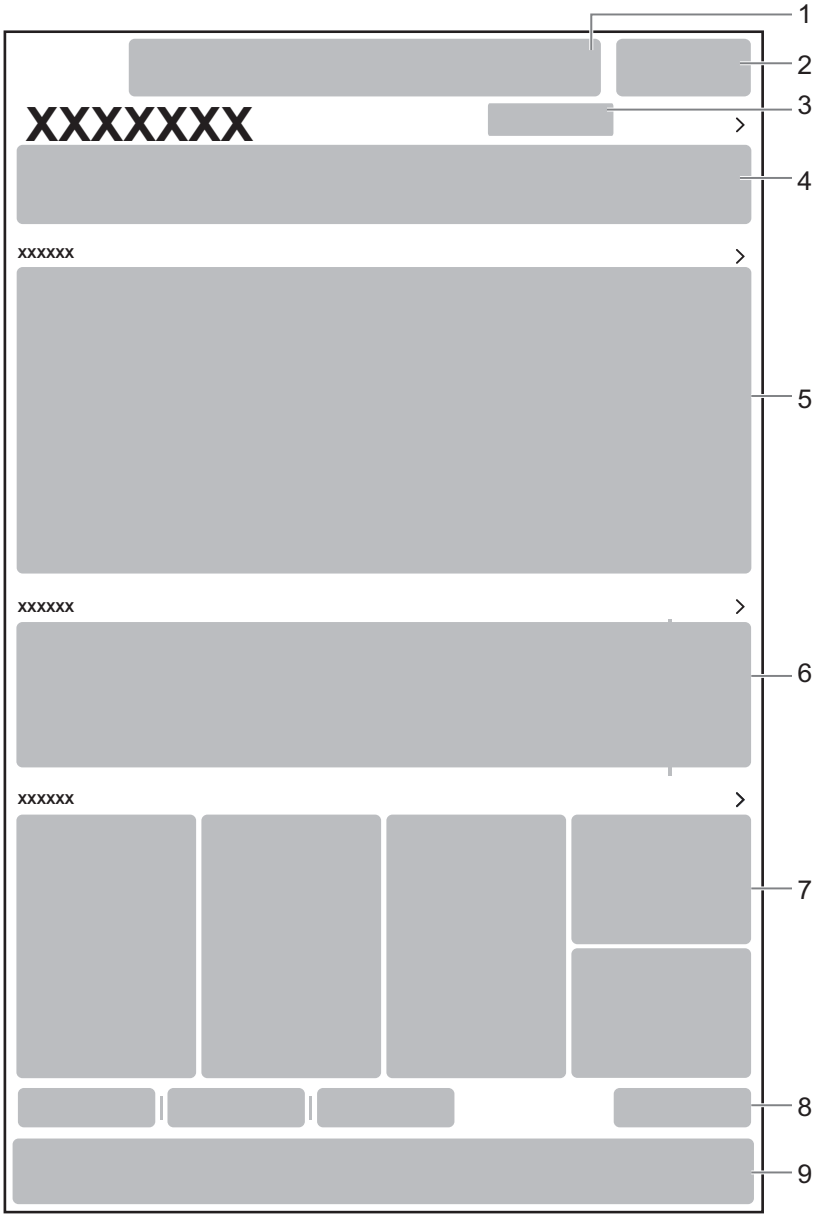

No.	Name	Description
1.	Alarm Information Area	Displays technical alarm messages, physiological alarm messages and prompt messages.
2.	System Status Information Area	Displays alarm symbol, battery status, network status, storage device status, and system time.
3.	CMS display area	Displays the currently connected CMS. Tap to open the available CMS list, and select the desired central monitoring system to be connected.

No.	Name	Description
4.	Patient Information Area	Displays the basic animal information. Tap to enter the **Patient** details interface.
5.	Monitoring Parameters Area	Displays parameter waveforms or parameter values, units, alarm limits, and alarm status. Tap to enter the **Monitoring** details interface. Selecting a waveform enters corresponding parameter menu, selecting the parameter list enters tabular trend review.
6.	Infusion Parameters Area	Displays the basic infusion information. Tap to enter the **Infusion** details interface.
7.	Environmental Parameters Area	Displays the basic environment control information. Tap to enter the **Environment** details interface to set environment parameters and auxiliary functions.
8.	Auxiliary Functions Running Status Area	Displays information of the enabled auxiliary functions. Tap to enter the **Environment** details interface to set environment parameters and auxiliary functions.
9.	Quick Buttons Area	Displays the quick keys supported in the current function module.

2.6.1 Available Quick Keys

The device provides quick keys to allow quick access some functions.

The quick keys displayed on the **Monitoring** interface are configurable.

Symbols	Name	Function
	More	Tap to show more quick keys.
	Screen Lock	Tap to lock the touch screen.
	Night Mode	Tap to enter the night mode.
	End Case Report	Tap to print the selected end case reports.
OPEN	Open Door	Tap to open the cabin door.
	Standby	Tap to enter the standby mode.
	Manual Event	Tap to manually trigger and save an event.
	Timer	Tap to open the **Timer Setup** menu.

Symbols	Name	Function
	Alarm Reset	Tap to reset the alarm system.
	Alarm Pause	Tap to pause the physiological alarms.
	Discharged Patients	Tap to open the **Discharged Patients** menu.
	Setup	Tap to open the corresponding setup menu.
	Review	Tap to open the **Review** menu.
	Screen Setup	Tap to open the **Screen Setup** menu.
	Alarm Setup	Tap to open the **Alarm Setup** menu.
	NIBP Measure	Tap to open the **NIBP Measure** menu.
	NIBP Start/Stop	Tap to start or stop the current NIBP measurement.
	NIBP Stop All	Tap to stop all NIBP measurements.
	STAT	Tap to start a five-minutes continuous NIBP measurement.
	Parameters Setup	Tap to open the **Parameters Setup** menu.
	Freeze	Tap to freeze waveforms.
	Minitrends	Tap to enter the **Minitrends** screen.
	ECG Lead/Gain	Tap to open the **ECG Lead/Gain** menu.
	ECG 24h Sum	Tap to view the **ECG 24h Summary**.
	Wireless Pair	Tap to enter the **Wireless Pair** screen.
	ECG Library	Tap to enter the **ECG Library** screen.
	Unpair	Tap to unpair the SpO_2 Module with this device.

Symbols	Name	Function
	Environment Mode	Tap to enter the **Environment Mode** details interface.

2.6.2 On-screen Symbols

Symbol	Description
	Canine
	Feline
	Other
	Battery capacity
	The battery has low power and needs to be charged.
	No battery is installed.
	Wired network is not connected.
	Wired network is connected.
	Wireless network is connected. The solid part indicates network signal strength.
	Wireless network is not connected.
OPEN	The cabin door not closed.
	Audible alarm tones are turned off.
	Audible alarm tones are paused.
	Individual alarms are turned off or the device is in the alarm off status.
	The alarm system is reset.
	All the alarms are paused.
O_2	Oxygen

Symbol	Description
CO2	Carbon dioxide (CO2)
	Humidity
	Air Temp
	Floor Temp
	Environment parameter has reached the target value
FAST+	**Smart Fast O2 Mode** has been enabled.
	Nebulization
	Ventilation
	Anion
	Light
	Patient Status Review
	Patient Report
	Inpatient Statistics

2.7 Symbols and Warning Labels

The symbols and warning labels of this device in order to call your attention to potential hazards. Read this manual carefully before using the device.

The general meaning assigned to geometric shapes, safety colors and contrast colors for safety signs are as follows:

Geometric shape	Meaning	Safety color	Contrast color	Graphical symbol color
	Prohibition	Red	White	Black
	Mandatory action	Blue	White	White

Geometric shape	Meaning	Safety color	Contrast color	Graphical symbol color
	Warning	Yellow	Black	Black

Their meanings are explained as follows:

Symbol	Description
	DEFIBRILLATION-PROOF TYPE BF APPLIED PART
	DEFIBRILLATION-PROOF TYPE CF APPLIED PART
	Refer to instruction manual/booklet
	General warning sign
	Warning; Crushing of hands
	Warning; Hot surface
	CE marking
	Alternating current
	Stand-by
	ALARM RESET
	Lamp; lighting; illumination
	Ventilating fan; air-circulating fan
	Stop
	NIBP start/stop
	Input/Output

Symbol	Description
	Video output
	USB port
	Protective earth (ground)
	Locking, general
	Unlocking
	Fuse
	Computer network
SN	Serial number
	Date of manufacture
20	RoHS (China). Administrative Measure on the Control of Pollution Caused by Electronic Information Products. Contains RoHS substances with 20 years environmentally friendly use period (EFUP)
IPX1	Protected against vertically falling water drops
IPX2	Protected against vertically falling water drops when enclosure tilted up to 15°
IP22	Protected against solid foreign objects of 12.5 mm Φ and greater; Protected against vertically falling water drops when enclosure tilted up to 15°
IP24	Protected against solid foreign objects of 12.5 mm Φ and greater; Protected against splashing water
	Caution
	Unlocking position
	Locking position

Symbol	Description
	Non-ionizing electromagnetic radiation
LOT	Batch code
	Do not wipe
O_2	Oxygen supply connector
	Nebulizer connector
*n*kg Max.	Maximum load n kg
	The following definition of the WEEE label applies to EU member states only: the use of this symbol indicates that waste electrical and electronic equipment must not be disposed of as unsorted municipal waste and must be collected separately. By ensuring that this product is disposed of correctly, you will help prevent bringing potential negative consequences to the environment and human health. For more detailed information with regard to returning and recycling this product, consult the distributor from whom you purchased the product
	Temperature limit
	Humidity limitation
	Atmospheric pressure limitation
	This way up

Symbol	Description
	Fragile, handle with care
	Keep dry/Keep away from rain
	Do not roll
	Stacking limit by number
	Centre of gravity

3 Basic Operations

3.1 Touch Screen Operations

3.1.1 Tapping or Swiping across the Screen

CAUTION

- Check that the touchscreen is not damaged or broken. If there is any sign of damage, stop using the device and contact the Customer Service Department or your local distributor.
- If the touchscreen is loose, stop using the device and contact the Customer Service Department or your local distributor.

You can touch the screen or swipe across the screen with your fingers to operate the device.

- Tapping the screen
  - To select an item from menus or lists, tap on the item with your finger.
  - To enter a parameter menu, tap corresponding numeric area or waveform area. For example, select the ECG numeric area or waveform area to enter the ECG menu.
- Swiping across the screen with a single finger

  To scroll through a list and a menu, swipe up and down.
- Swiping across the screen with two fingers

  To discharge an animal, swipe from top to bottom.

3.1.2 Soft Keyboard Operations

The on-screen keyboard enables you to enter information:

- Enter the information by selecting one character after another.
- Select the ← (Backspace) button to delete single characters or select ⊗ to delete the entire entry.
- Select the A (Caps Lock) button to access uppercase letters.

  Select the ↵ (Enter) button to confirm the entry and close the on-screen keyboard.

3.1.3 Submenu Operations

Tap any functional area on the main screen to enter the corresponding function details interface.

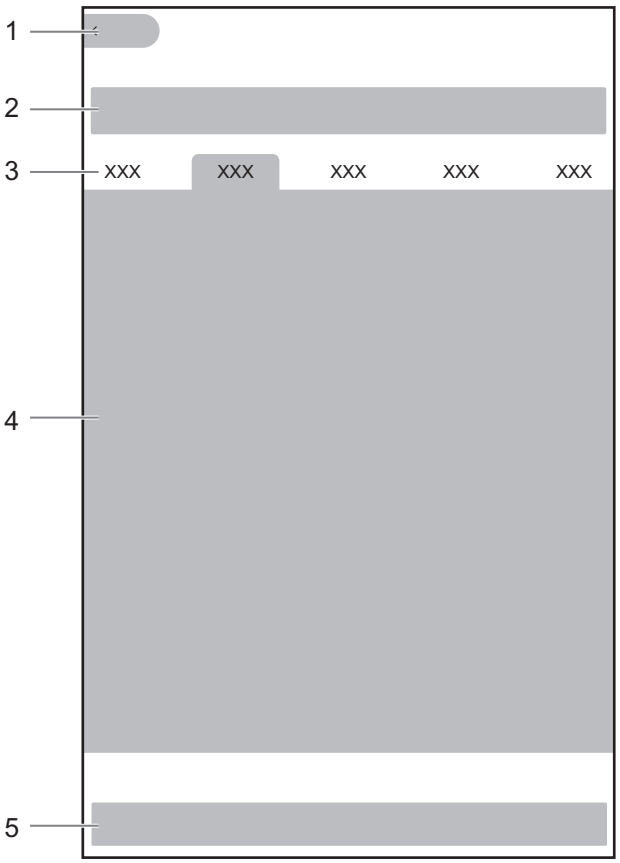

No.	Area	Operation
1.	**Home** button	Tap to return to the main screen when on other screens.
2.	**Patient Information Area**	Tap to enter to the animal information details interface.
3.	Function switch tab	Tap to switch to the corresponding function details interface.
4.	Function Details	Displays the menu, tools and other detailed information of the current function.
5.	**Quick Buttons Area**	Displays the quick keys supported in the current function module.

3.2 Locking the Touch Screen

To avoid misuse, you can temporarily disable the touch screen.

Do one of the following to lock the touch screen:

- On the main screen, tap (**More**) > (**Screen Lock**).

- Set **Auto Screen Lock Time**, and the touch screen will be locked when the preset time is reached.

After the touch screen is locked, the lower part of the main screen displays the lock symbol , prompting that the touch screen is locked.

To unlock the touch screen:

- Tap any position on the touch screen and slide to .
- The touchscreen is enabled when the preset time is reached.

3.3 Using the On-Screen Timers

WARNING

Do not use the timers for tasks related to critical animals.

The device has a timer function to notify you when a preset time period is expired.

Perform the following procedure:

1. Tap (**Timer**) quick key on the main screen to open the **Timer Setup** menu.
2. Set the timer parameters as required.
3. Tap **Start timer**.
   - The timer control appears in the auxiliary function area of the main screen, and use the control to pause or resume the timer.
     – : pauses the timer.
     – : starts the timer.
     – : clears the timer and end this timer episode.
   - Tap (**Timer**) quick key on the main screen to open the **Timer Setup** menu, and then tap **Stop timer** to end the current timing.

3.4 Initiating a Manual Event

Perform the following procedure:

1. Tap **Manual Event** quick key on the main screen to open the **Manual Event** menu.

   Tap to open the **Manual Event Setup** menu. And edit the name of preset event names as required.
2. Select a name for this event, or manually enter the event name.
3. Tap **OK**.

   The device saves this manual event automatically.

3.5 Setting the Nursing Level Indicator

Perform the following procedure:

1. On the main screen, tap the patient information area to enter the **Patient** detail screen.
2. Tap **Nursing Level Indicator** in the **Basic Information** area, and select the desired nursing level name from the drop-down list box.

   The nursing level indicator will illuminate in the color of the selected nursing level.

   The nursing level name can be customized as needed. For details, see **5.2.1 General Maintenance**.

3.6 Operating the Cabin Door

3.6.1 Opening the Cabin Door

Do one of the following to open the cabin door:

- Use the Door Open Button on the lower side of the device.
- On the main screen, tap **More** > **Open Door**.

The cabin door opens automatically, and the OPEN is displayed in the **System Status Information Area**.

3.6.2 Closing the Cabin Door

Push the door to the closed position, and the cabin door will be closed automatically.

For ViCare U7, close the left door firstly, and then the right door.

3.6.3 Operating the Operation Window

Opening the Operation Window

Perform the following procedure:

1. Press and hold the operation window knob while rotating it 90° counterclockwise.

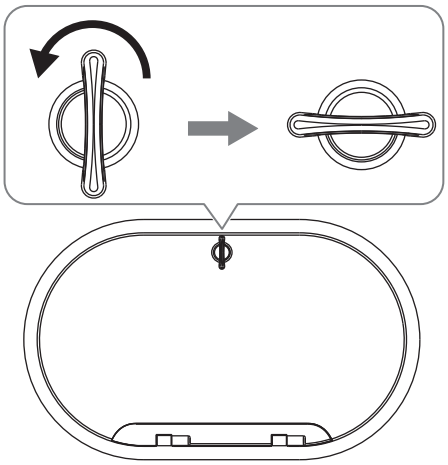

2. Pull the knob gently to open the operation window.

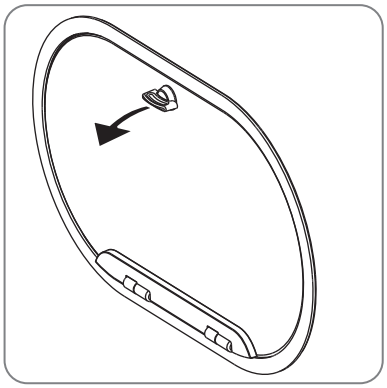

Closing the Operation Window

Perform the following procedure:

1. Push the operation window gently to the closed position.

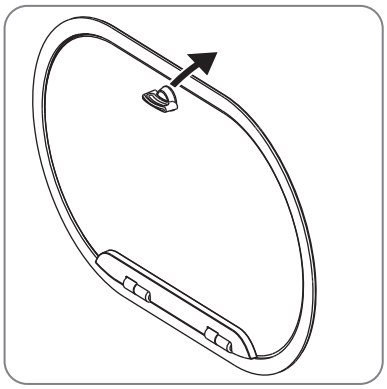

2. Press and hold the operation window knob while rotating it 90° clockwise.

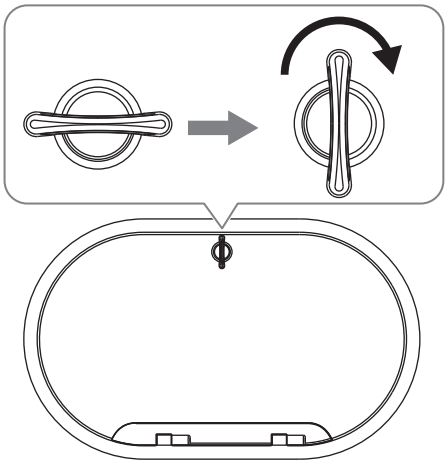

4 Preparations

4.1 Installation

WARNING

- The installation must be performed by a qualified electrical engineer under the guidance of the customer service engineer or your distributor.
- Always use the accompanying power cord delivered with the device.
- Before connecting the AC power supply, confirm that the voltage and frequency of the AC power supply comply with the specifications specified in the device label or in the manual.
- Use batteries to power the external protective cables when there is doubt about the integrity of the installation or wiring. Otherwise, the patient and operator may receive electric shock.
- Connect the drain pipe or container to the drain outlet at the back of the device before use.

4.1.1 Environmental Requirements

The operating environment of the device must meet the requirements specified in this manual.

The environment should be reasonably free from noises, vibration, dust, corrosive, flammable and explosive substances. If is installed in a cabinet, sufficient space in front and behind should be left for convenient operation, maintenance and repair.

Sufficient space should be reserved around the device after installation so that air can be circulated smoothly for good ventilation and operation. The device can be installed in various ways as required, see **Figure 4-1**, **Figure 4-2**, **Figure 4-3**.

Figure 4-1 ViCare U7/ViCare U7L/ViCare U7R

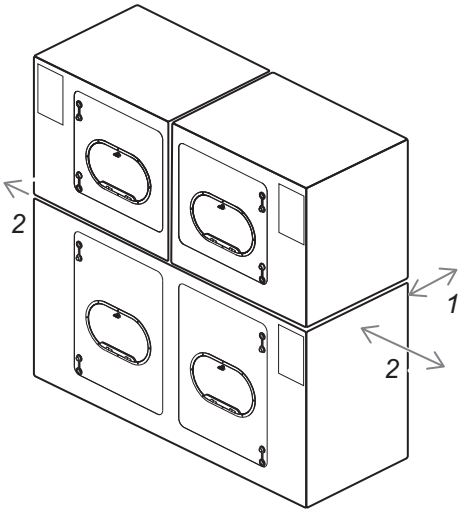

Figure 4-2 ViCare U7

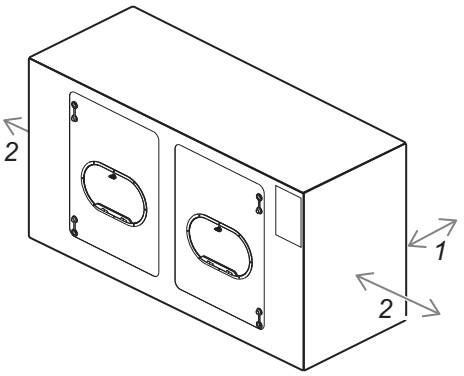

Figure 4-3 ViCare U7L/ViCare U7R

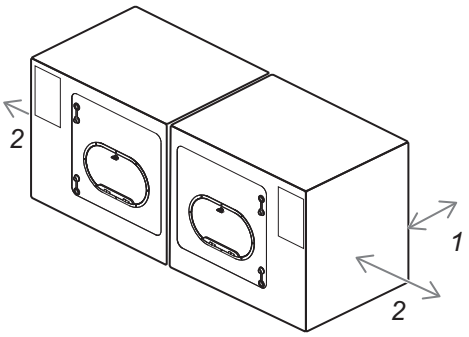

1.	Leave at least 250 mm at the back
2.	Leave at least 300 mm on each side of the left and right sides

When the device is moved from one place to another, condensation may occur as a result of temperature or humidity difference. In this case, never start the device before the condensation disappears.

4.1.2 Installing the Device

For installation-related operations, contact the Customer Service Department or your distributor.

4.2 Connecting the Power Supply

4.2.1 Connecting the AC Power Supply

After connecting the device to the AC mains, check that the AC indicator is on to ensure the AC power connection is normal.

4.2.2 Using the Battery

WARNING

- Keep the batteries out of children's reach.
- Use only specified battery. Use of a different battery may present a risk of fire or explosion.
- Do not allow the battery to come into contact with liquid.
- Do not crush, drop or puncture the battery. Mechanical abuse can lead to internal damage and internal short circuits. If a battery has been dropped or banged against a hard surface, whether damage is externally visible or not, remove the battery from use and dispose of it properly.
- If a battery shows signs of damage or signs of leakage, replace it immediately.
- Extremely high ambient temperature may cause battery overheat protection, resulting in device shutdown.
- Do not incinerate batteries or expose them to temperatures above 60°C This may cause the battery to burn, explode, leak, or become hot, causing personal injury.

CAUTION

- Properly dispose of batteries according to local regulations.
- Remove the battery of NIBP module before shipping or if it will not be used for an extended period of time.

NOTE

- Battery operating time depends on device configuration and operation.
- Do not use this device for animal monitoring or infusion during battery conditioning.
- Do not interrupt battery conditioning.
- Storing batteries at high temperatures for an extended period of time will significantly shorten their life expectancy.
- Storing batteries in a cool place can slow the aging process. Ideally the batteries should be stored at 15 °C.
- Check the battery for adequate power when the device runs on battery power. Charging the battery if required
- If the battery is not conditioned for a prolonged time, its charge indication may not be accurate and you may wrongly evaluate the remaining battery runtime. In addition, if the battery is fully charged for a long time and is not maintained regularly, the aging of the battery will be accelerated, resulting in premature failure of the battery.

Using the Battery of the Main Unit

WARNING

- The battery must only be installed by service personnel trained and authorized by Mindray Animal Medical.
- Keep the batteries in their original package until you are ready to use them.
- The battery should be charged only in this device.
- The service life of the main unit battery depends on the frequency and time of battery use. The built-in battery of the main unit has a service life of 3 years. Replace your battery when it reaches the end of its service life. Failure to replace the battery may cause serious damage to your device from battery overheating.

NOTE

- If the power input fails and the device runs on the battery power, the display brightness automatically lowers to the dimmest. You can manually adjust the display brightness as required.
- When the battery is low, the device presents the **Low Battery** alarm; If the battery is almost depleted, the device presents the **Critically Low Battery** alarm. In this case, immediately connect the AC mains to power the device and charge the battery. Otherwise, the device will automatically shut down soon.
- The battery storage temperature is between -5 °C and 35 °C. When storing batteries, make sure that the battery terminals do not come into contact with metal objects. If batteries are stored for an extended period of time, place the batteries in a cool place.

This device is designed to operate battery power when the external power supply is not available.

The device uses mains power as primary power source. In case of mains power failure, the device automatically runs on the battery power, which will not interrupt monitoring and infusion. However, the environment control function will be suspended.

Using the Batteries of Wireless Modules

Wireless modules include SpO_2 module, NIBP module and ECG module. The SpO_2 module and ECG module are powered by embedded rechargeable lithium-Ion batteries. The NIBP module is powered by a replaceable rechargeable battery.

The service lives of the batteries depend on how frequently they are used.

The service life of the built-in batteries of the SpO_2 module and ECG module is about 5 years. Improper use of the batteries may shorten its life. We recommend replacing the batteries every 5 years. The performance of the batteries deteriorates over time. You should check the battery performance every 3 months or if you doubt that the battery may fail.

The NIBP module battery has a service life of 3 years. Replace your battery when it reaches the end of its service life. Failure to replace the battery may cause serious damage to your device from battery overheating.

Battery Status Indicator

The battery status indicator indicates the battery capacity.

- The battery status indicator of the main unit is located in the System Status area of the main screen.
- The battery status indicators of the wireless modules are located in the corresponding monitoring parameter area on the main screen.

4.3 Connecting Oxygen Supplies

This device provides high-pressure and low-pressure oxygen supply connectors.

WARNING

- Inspect the oxygen supply connector carefully and ensure that there is no leakage. High leakage may result in the oxygen concentration around the device higher than the normal atmospheric level to create an oxygen-enriched environment that contains potential hazards.
- Place the oxygen supply hose carefully and avoid its exposure to the environment in which possible damage to the oxygen supply hose is easily caused by cut or heating.

CAUTION

- Do not connect the high-pressure and low-pressure oxygen supplies at the same time.
- Do not use the humidifier and oxygen generator together when the oxygen generator is used as a gas supply of device. If the oxygen generator is equipped with a humidifier, drain the water away from the humidifier or remove the humidifier before using the device.
- The low-pressure oxygen hose assembly shall comply with the requirements of ISO 5359.
- Use only hoses that have been approved to serve medical purposes and for connection with oxygen supplies to reduce the risk of fire.
- Switch off the oxygen supply when the device is not in the oxygen therapy status to reduce the risk of fire.
- Please use dry and clean medical oxygen as gas supply. Moisture in the gas supply may lead to device faults.

4.3.1 Connecting the High-Pressure Oxygen Supply

NOTE

Check if the sealing ring at the gas supply connection is intact before connecting the gas supply hose. If the sealing ring is damaged, do not use the hose. Replace the sealing ring to prevent leakage.

Perform the following procedure:

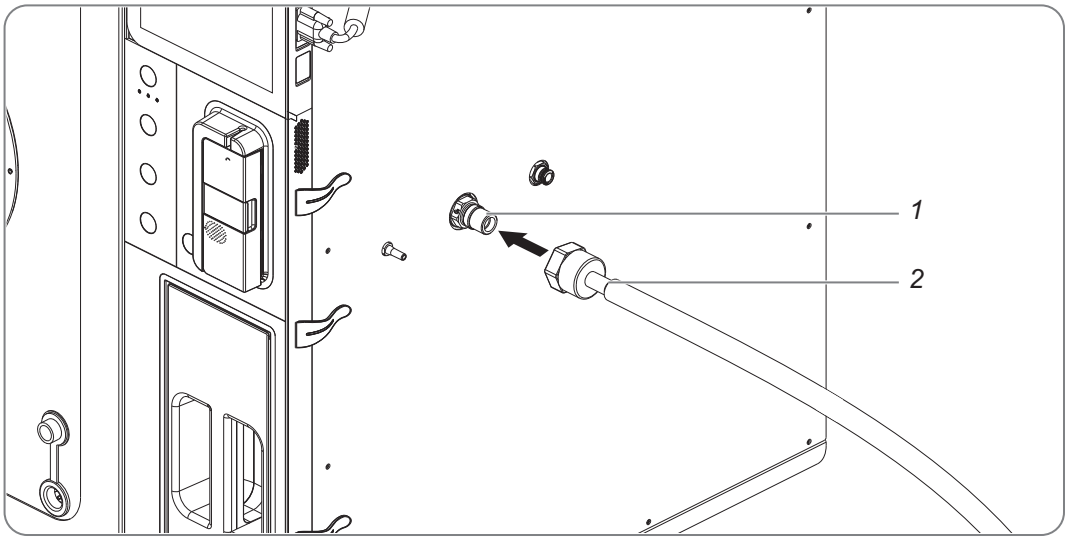

1.	High-pressure oxygen supply connector
2.	High-pressure oxygen supply hose and fitting

1. Insert the connector into the high-pressure oxygen supply inlet on the side panel of the device.
2. Ensure that the gas supply hose is properly connected to the gas supply inlet and tighten the hose nut.

4.3.2 Connecting the Low-Pressure Oxygen Supply

Perform the following procedure:

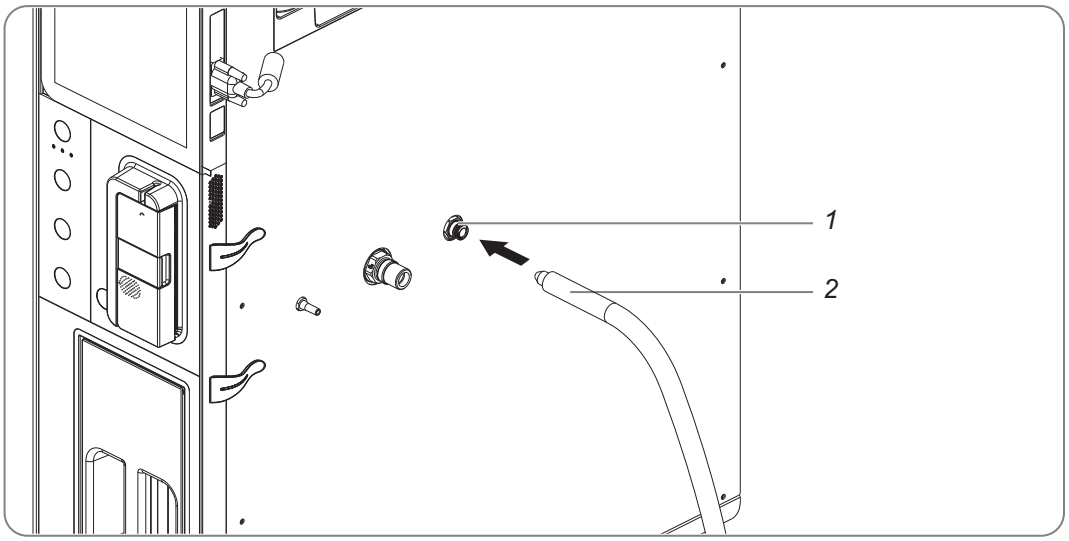

1.	Low-pressure oxygen supply connector
2.	Low-pressure oxygen supply hose

Insert the connector into the low-pressure oxygen supply inlet on the side panel of the device. When a click is heard, it indicates that the gas supply hose is inserted in place.

Depress the metal dome on the low-pressure oxygen supply connector to remove the gas supply hose.

4.4 Filling Water to the Water Tank

Perform the following procedure:

1. Hold the handle of the water tank and lift it up, and then pull the water tank out horizontally.

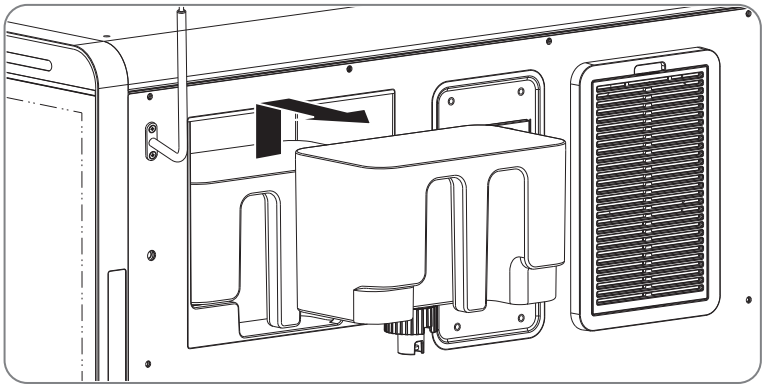

2. Turn over the water tank, loosen the water tank connector in the direction of the arrow, and fill it with water.

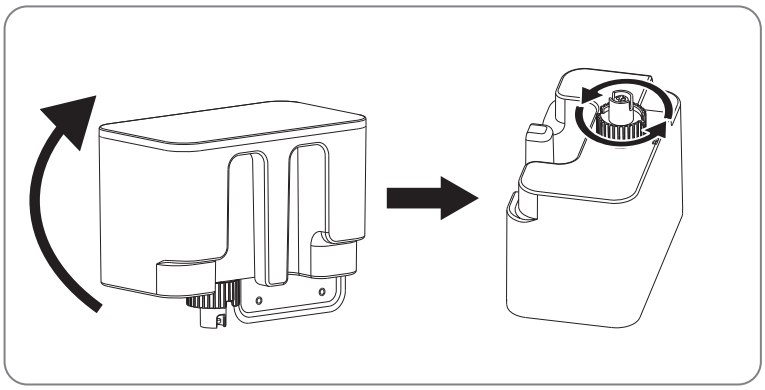

3. Tighten the water tank connector.

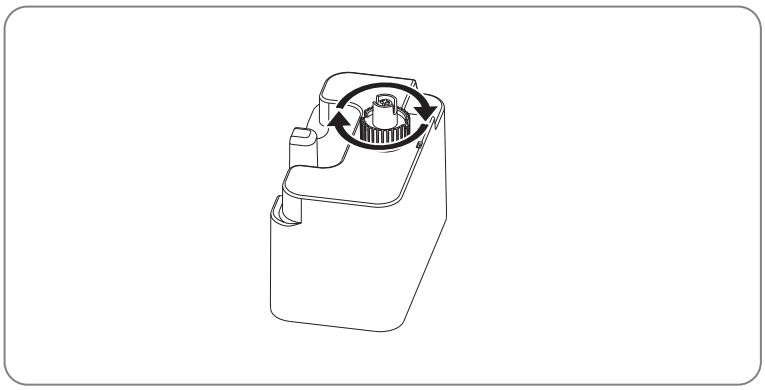

4. Hold the handle of the water tank and turn over it for 180°, and then install the water tank back as indicated by the arrow.

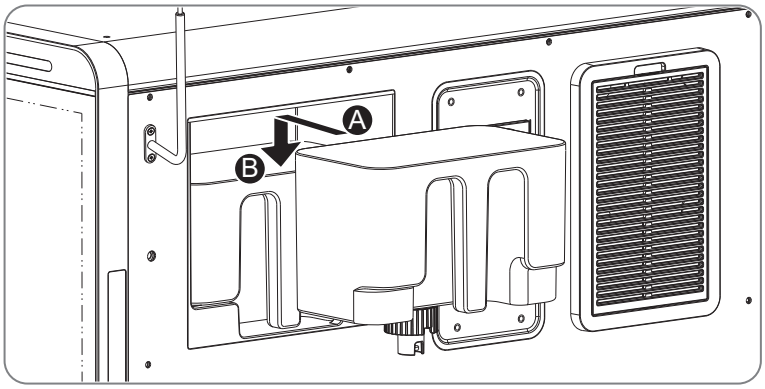

4.5 Filling/Replacing the Soda Lime

WARNING

Single use items may be considered potential biologically hazardous items and should not be reused.
Single use items may be considered potential biologically hazardous items and should not be reused.
Dispose of these items in accordance with hospital policy and local regulations for contaminated and biologically hazardous items.

NOTE

- Install soda lime as needed before the first use of the device.
- Inspect the color of the soda lime in the CO_2 absorber canister. Replace the soda lime immediately if obvious color change is detected.

ViCare U7

Perform the following procedure:

1. Remove the CO_2 absorber canister:

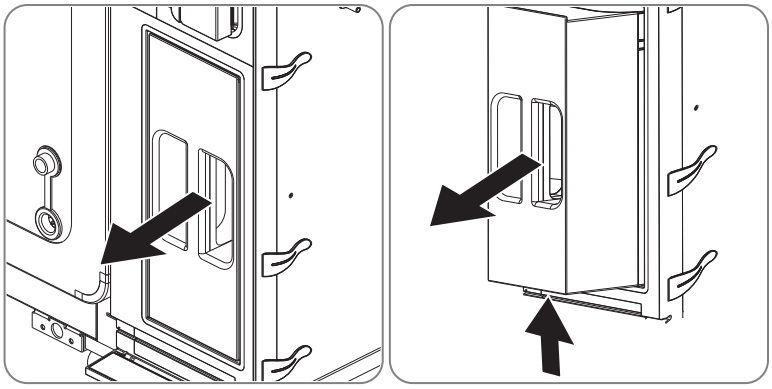

1. Hold the handle of the CO_2 absorber canister and pull it out partially.

2. Support the bottom of the CO_2 absorber canister and pull it out completely.

2. Remove the upper cover of the CO_2 absorber canister and fill the soda lime.

The amount of soda lime should be filled between the MIN and MAX scale lines.

To replace the soda lime, remove all the used soda lime and then fill new soda lime.

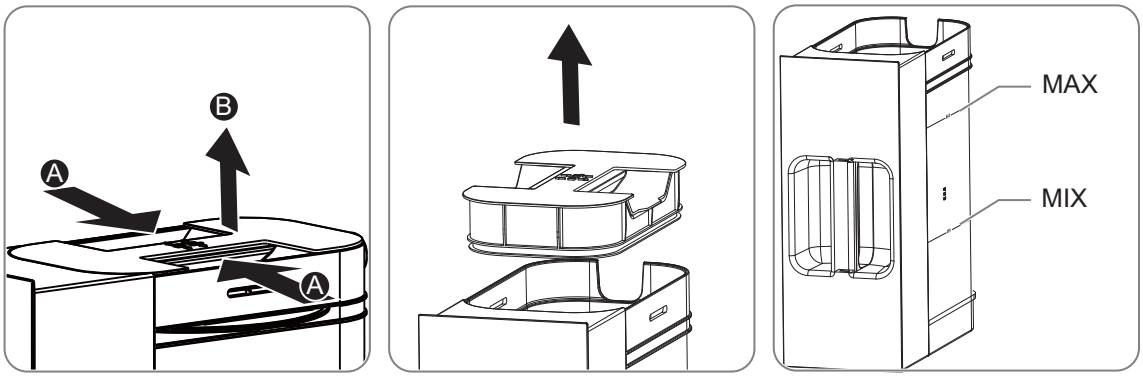

3. Install the CO_2 absorber canister:

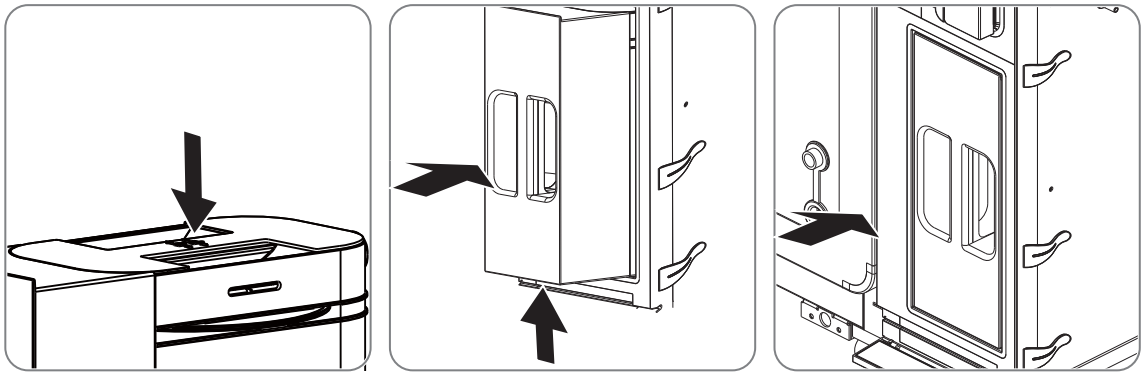

1. Install the upper cover of the CO_2 absorber canister.

2. Hold the handle with one hand and install the CO_2 absorber canister back onto the device with the other hand.

3. Gently push the handle to ensure that the CO_2 absorber canister is installed in place.

ViCare U7R/ViCare U7L

Perform the following procedure:

1. Remove the CO_2 absorber canister:

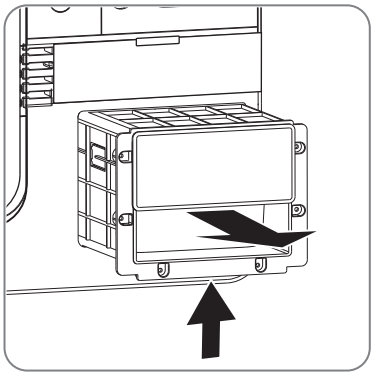

1. Hold the handle of the CO_2 absorber canister and pull it out partially.

2. Support the bottom of the CO_2 absorber canister and pull it out completely.

2. Remove the upper cover of the CO_2 absorber canister.

1. Loosen the retaining ring on the upper cover of the CO_2 absorber canister.

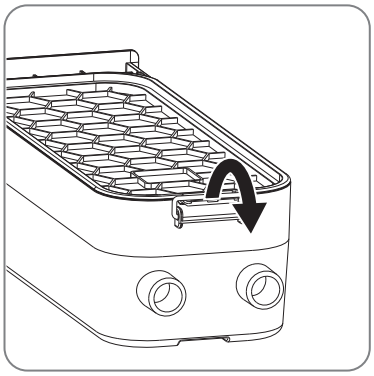

2. Remove the upper cover in the direction of the arrow.

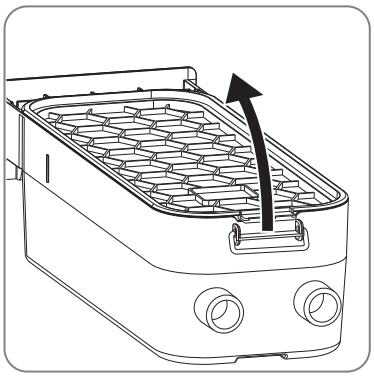

3. Fill the soda lime.

The amount of soda lime should be filled between the MIN and MAX scale lines.

To replace the soda lime, remove all the used soda lime and then fill new soda lime.

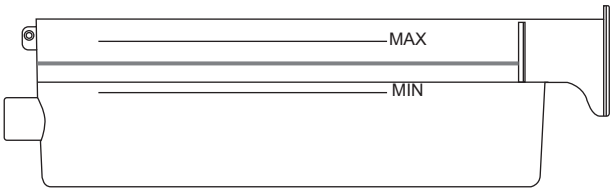

4. Install the CO_2 absorber canister:

1. Insert the tenon end of the upper cover into the slot, press the other end of the upper cover, and ensure that it is installed in place.

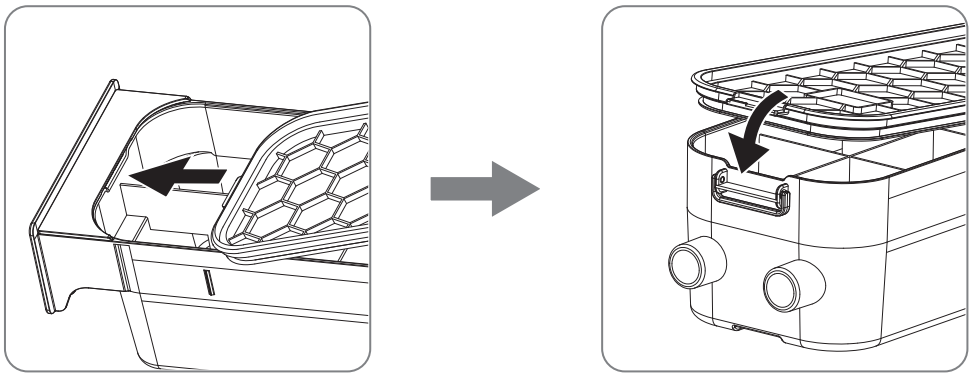

2. Fasten the retaining ring.

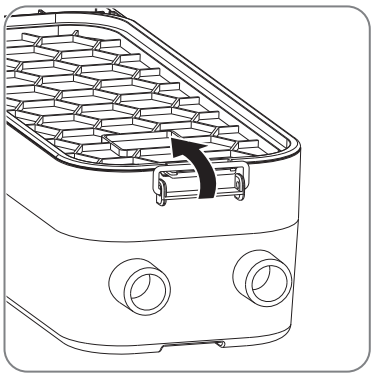

3. Install the CO_2 absorber canister back to the device and gently push the handle to ensure that the CO_2 absorber canister is installed in place.

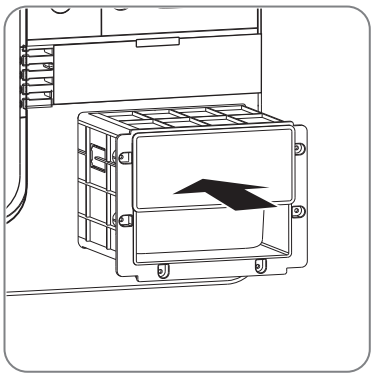

4.6 Installing Curtains

Figure 4-4 ViCare U7

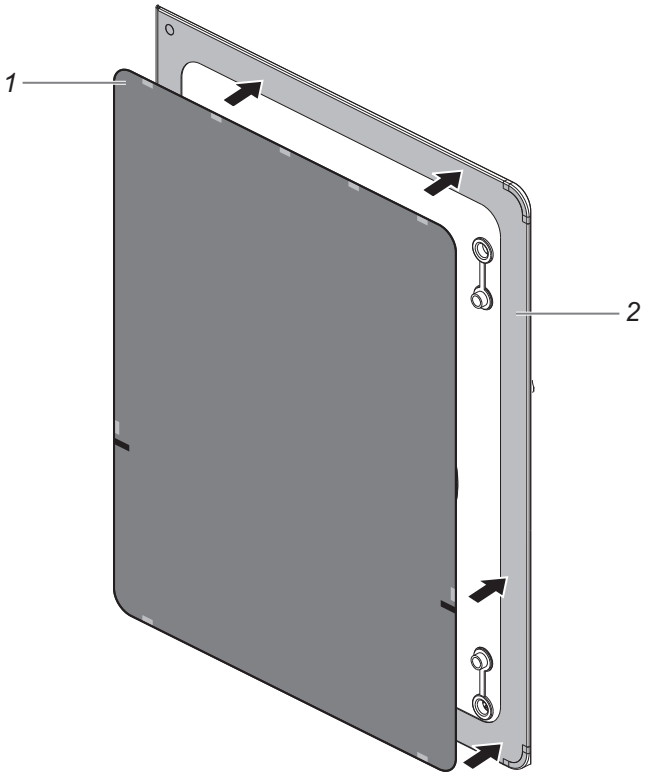

Figure 4-5 ViCare U7L/ViCare U7R

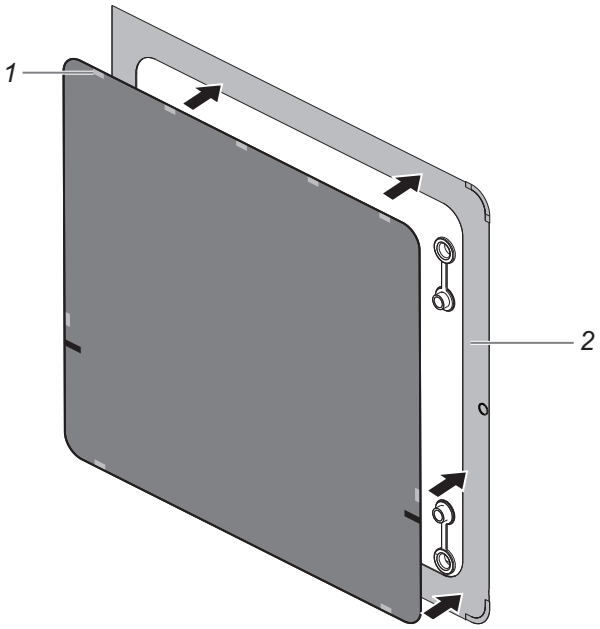

1.	Built-in magnets
2.	Outer metal frame of the cabin door

With the patterned side facing outward, attach all curtain magnets to the outer metal frame.

4.7 Wireless Monitoring Modules

4.7.1 Safety Information

WARNING

- The wireless monitoring modules and parameter monitoring accessories are suitable for use in animal environment. The chargers are not for use in patient environment. For other device and accessories connected to the wireless monitoring modules, consult corresponding manufacturers for the suitability within the animal environment.
- If it is not evident from the device specifications whether a particular combination with other devices is hazardous, for example, due to summation of leakage currents, please consult Mindray Animal Medical or an expert in the field. A determination must be made that the proposed combination will not negatively affect the devices themselves or the animal's safety.
- Use only the chargers by Mindray Animal Medical to charge the batteries.
- Use only the power cord delivered with C10 charger.
- Operate the chargers on a stable and flat surface.
- Keep the chargers, wireless mobile modules and batteries away from liquids. Use the chargers in dry and indoor environment.
- Do not disassemble, puncture or incinerate the chargers or batteries.
- Do not stack the chargers.
- No modification of the chargers or power plug is allowed.
- Before connecting the charging station to the AC mains, check that the voltage and frequency ratings of the power line are the same as those indicated beside the AC power input.
- Make sure the charger is intact and functioning well before charging.
- Do not cover the charger or batteries. Keep the charger in a cool and ventilated place while charging.
- Do not connect other devices to the power supply system.
- Extremely high ambient temperature may cause battery overheat protection and interrupt the charging. Do not charge the batteries at a temperature over 40°C.
- In the case of charger failure, disconnect the AC power, remove the batteries, and contact the Customer Service Department or your distributor.
- The ECG module and SpO_2 module are powered by embedded batteries that are not intended to be replaced. Do not open the device housings. All servicing and future upgrades must be carried out by trained and authorized personnel. If you find any signs of damage, remove the device from use and contact the Customer Service Department or your local distributor.

CAUTION

- Use the chargers only in an environment as specified in this manual.
- Do not touch the contacts of the chargers, wireless monitoring modules or batteries. Impaired contacts could affect the charging performance.
- Make sure the battery clicks into place for charging so the battery can be secured onto the charging slot.

NOTE

- The charging station uses a mains plug as isolation means to the mains power. Do not locate the charging station in a place difficult to operate the mains plug.
- After a battery is properly installed onto the charging station, check that the indicators light up.
- Charge the battery at room temperature. The charging time may be prolonged at excessive high or low temperature.

4.7.2 Charging the Batteries

Before use, check the battery capacity of the SpO_2 module, Temp module, ECG module, and NIBP module.

he NIBP module is powered by a rechargeable lithium-Ion battery. Install the battery before using the NIBP module.

Charging the SpO_2 module and ECG module by using the C25 charger

Perform the following procedure:

1. Connect a USB Type-C cable to the USB Type-C connector on the C25 charger and then the external DC power.

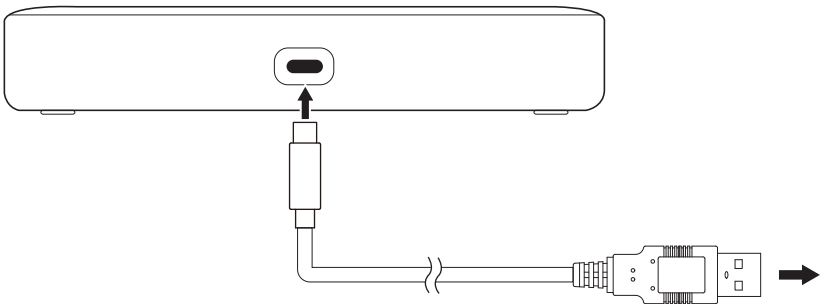

2. Put the SpO_2 module or ECG module onto the correct charging slot.

   Make sure the contacts of the SpO_2 module or ECG module are aligned with those on the C25 charger.

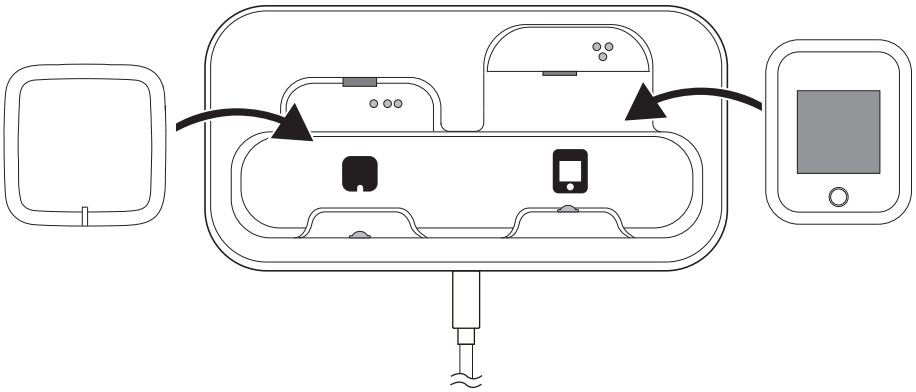

3. Push the SpO_2 module or ECG module down until you hear a click.

   After the SpO_2 module or ECG module is properly installed on the C25 charger, the battery starts to be charged.

Charging the battery of NIBP module by using the C10 charger

Perform the following procedure:

1. Follow the directions indicated in the following picture and remove the clip from the NIBP module.

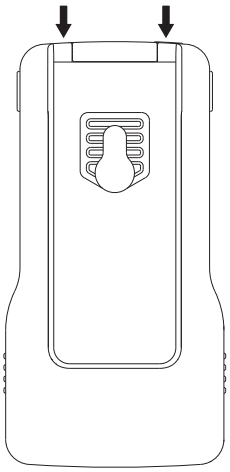

2. Hold the protrusions on both sides of the battery and lift up the battery to remove it from the battery compartment.

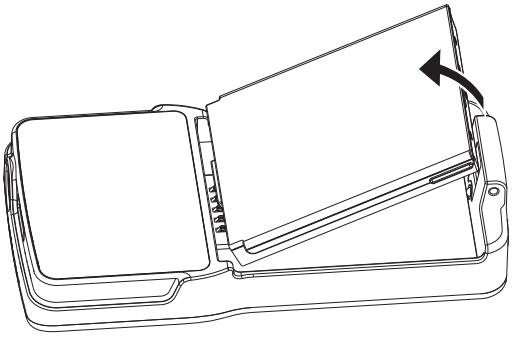

3. Connect the power cord of the charging station to a wall AC outlet.

   Make sure the power indicator of the charging station is on and green.

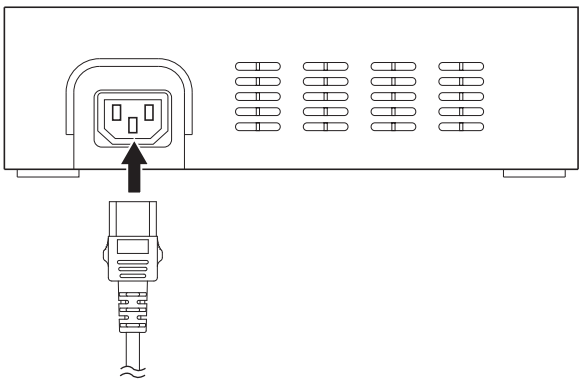

4. Make sure the contacts of the battery are aligned with those on the charging station, and then push the battery down until you hear a click.

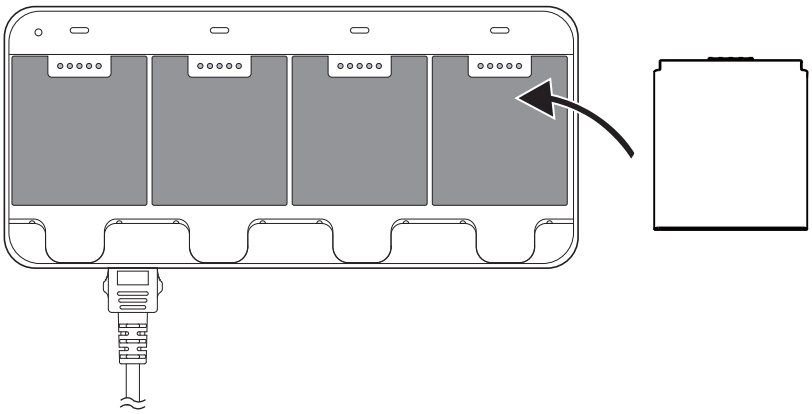

After the battery is properly installed on the charger, it starts to be charged.

4.7.3 Installing the Receiver Module

Perform the following procedure:

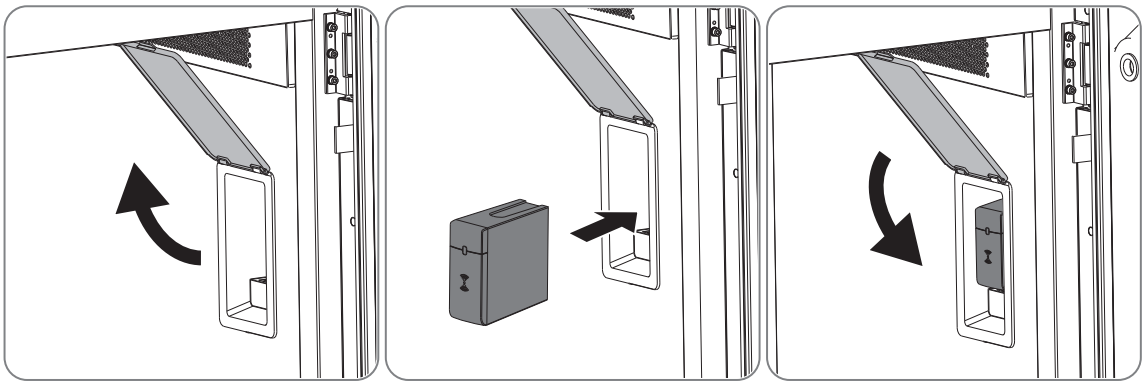

1. Open the module slot cover inside the device.
2. Push the receiver module into the module slot and ensure that it is installed in place.
3. Close the module slot cover.

4.7.4 Installing the Battery of the Temp Module

Perform the following procedure:

1. Rotate the battery compartment cover counterclockwise to the unlocked position ( ).

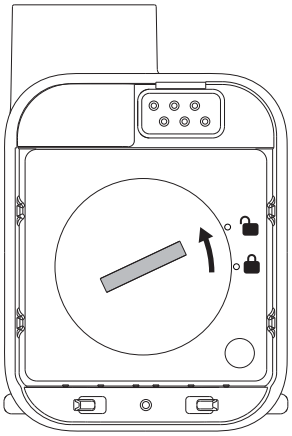

2. Install the coin battery into the battery compartment as indicated by the positive and negative poles.
3. Rotate the battery compartment cover clockwise to lock (🔒).

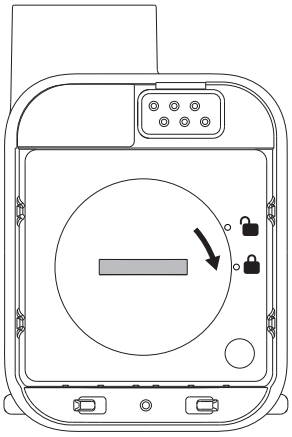

4.7.5 Connecting the Monitoring Modules

Connecting the SpO_2 module and SpO_2 Sensor

Perform the following procedure:

1. Align the contact points of the SpO_2 module with that of the Temp module, and then press the bottom edge of the SpO_2 module to install the SpO_2 module to the Temp module.

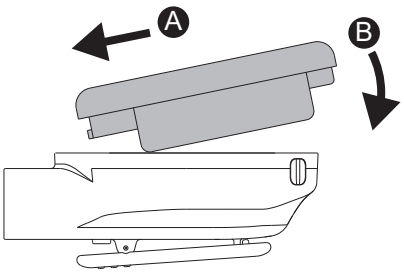

2. Connect the SpO_2 sensor and temperature probe.
   - Connect the SpO_2 sensor

     For detailed information about the SpO_2 sensor, see the instructions delivered with it.

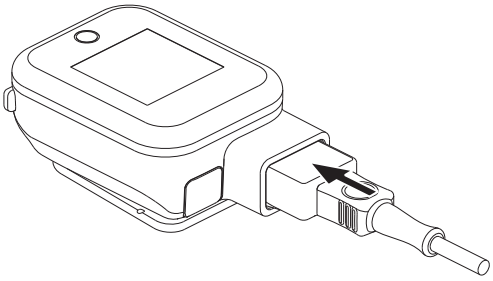

- Connect the temperature probe

  Before connecting the temperature probe, open the protective cover and then plug in the temperature probe connector.

  For detailed information about the temperature probe, see the instructions delivered with it.

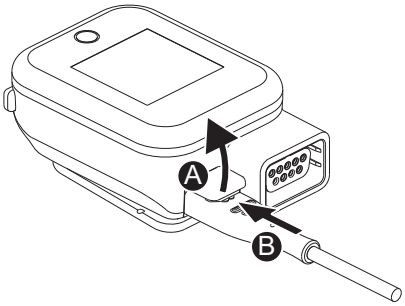

Connecting the ECG Lead of ECG Module

For detailed information about the ECG lead, see the instructions delivered with it.

Perform the following procedure:

1. Put the ECG module onto the connector of the ECG lead with both sides aligned.

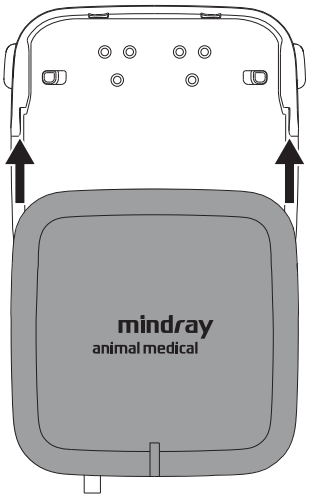

2. Slide the ECG module to the left to install it into the connector of the ECG lead.

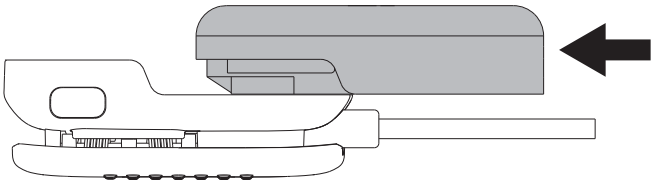

Installing Battery for the NIBP Module

Perform the following procedure:

1. Push the battery into the battery compartment and press down until it clicks into the place.

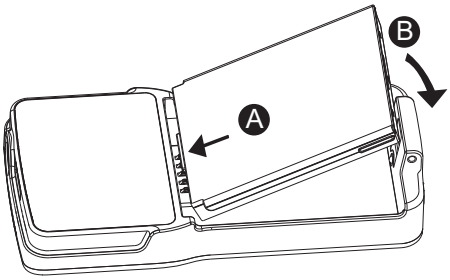

2. Align the clip with the grooves on the back of the module, and push it until you hear a click.

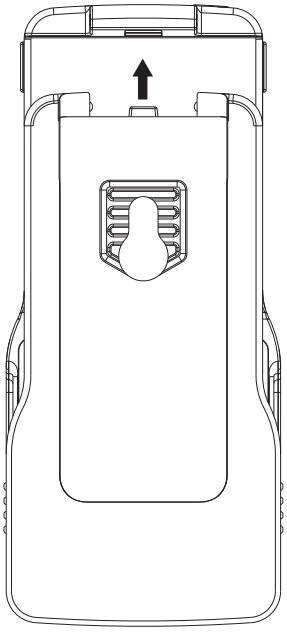

4.7.6 Establishing Wireless Connection

Pairing the SpO_2 Module with the Device

Perform the following procedure:

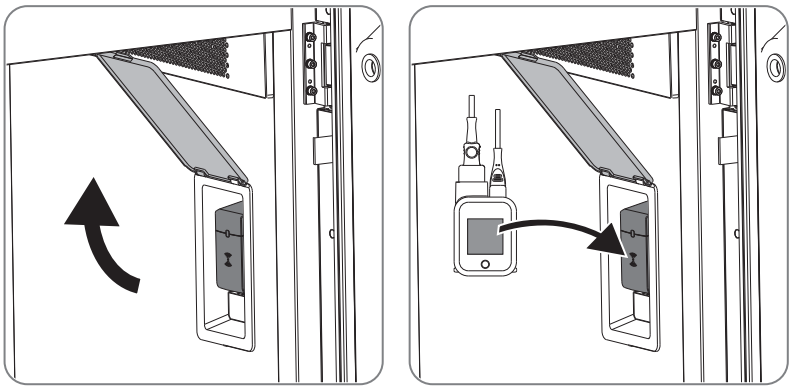

1. Open the module slot cover inside the device.
2. Place the SpO_2 module close to the pairing area of the receiver module until you hear a beep.
3. Check the screen of the SpO_2 module immediately. If a confirmation screen is displayed, press the touch button to confirm the pairing.

   Failing to do so would cancel the pairing.
4. After successful pairing, close the module slot door inside the device.

Pairing the SpO_2 Module with an ECG Module

Perform the following procedure:

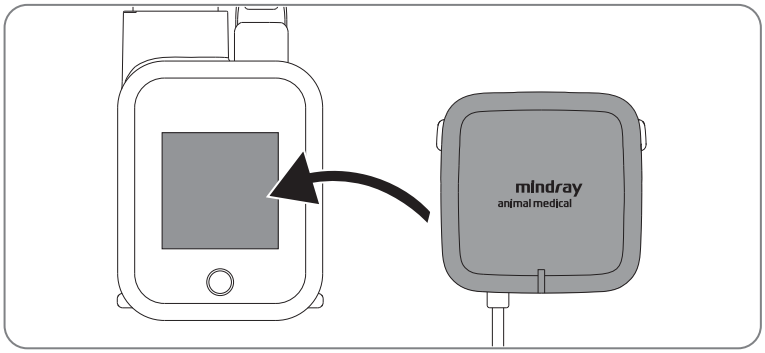

1. Place the front of the ECG module close to the screen of the SpO_2 module until you hear a beep.
2. Check the screen of the SpO_2 module immediately. If a confirmation screen is displayed, press the touch button to confirm the pairing.

   Failing to do so would cancel the pairing.

Pairing the SpO_2 Module with an NIBP Module

Perform the following procedure:

1. Press the Power on/off button on the NIBP module to turn the module on.

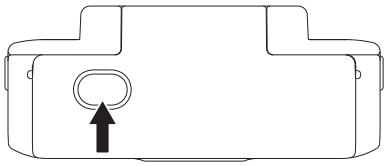

2. Place the front of the NIBP module close to the screen of the SpO_2 module until you hear a beep.

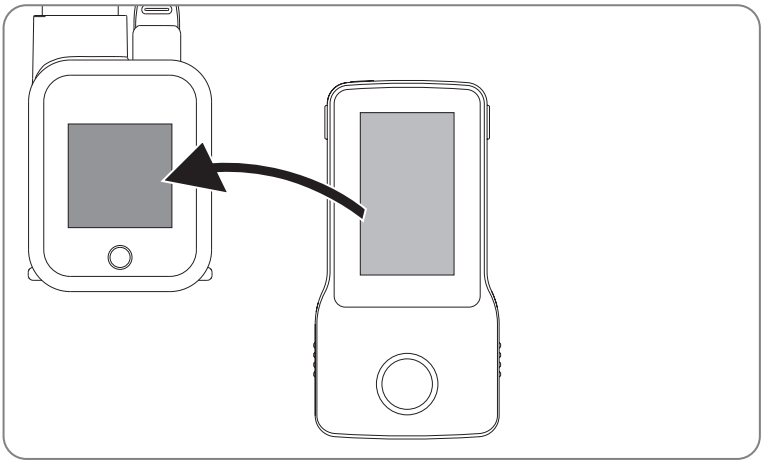

3. Check the screen of the SpO_2 module immediately. If a confirmation screen is displayed, press the touch button to confirm the pairing.

   Failing to do so would cancel the pairing.

   If the pairing succeeds, **Paired successfully** is displayed on the screen of the NIBP module.

4.8 Powering On the Device

4.8.1 Check before Powering On

Check before the device is powered on:

- The temperature, relative humidity and atmospheric pressure meet the requirements of the operating conditions.
- There is no condensation.
- There is no distortion, damage or dirt on the device and peripheral devices.
- If any dirt is found, cleaning shall be performed.
- The touch screen and control panel should not be loose or have loose screws.
- There is no cable damage (e.g., power cord). Maintain secure connections to the device at all times.
- No miscellaneous odds and ends are attached or affixed to the device.
- Ensure that all connections are free from damage and remain clear of foreign object blockages. There are no obstacles around the device and its air vent.
- The entire scanning environment and field must be clean.

4.8.2 Turning on the Device

WARNING

After transportation, keep the device still for 24 hours before connecting it to AC power.

Press the ⏻ (power switch) button on the control panel to power the device on.

4.8.3 Check after Powering On

Check after the device is powered on:

- There are no unusual sounds or smells indicating possible overheating.
- There are no persistently displayed system error messages.
- There is no evident excessive noise.
- The control panel buttons are fully functional.
- The screen displays normally depending on the device modes.

WARNING

If you find anything not functioning properly, this may indicate that the device is defective. In this case, shut down the department immediately and contact the Customer Service Department or your local distributor.

4.9 Turning Off the Device

Before turn off the device, perform the following check:

- Ensure that the monitoring of the animal has been completed.
- Disconnect the cables and sensors from the animal.
- Make sure to save or clear the animal monitoring data as required.

To turn off the device, press and hold the ⏻ (power switch) button for 3 seconds. Turning off the device does not disconnect the device from the AC mains. To completely disconnect the power supply, turn off the AC power.

CAUTION

Press and hold the ⏻ (power switch) for 10 seconds to forcibly shut down the device if it could not be shut down normally. This may cause loss of animal data.

4.10 Standby

If the operator wants to stop monitoring an animal temporarily but does not want to turn off the device, standby mode can be used.

WARNING

In the standby mode, the device stops all parameter measurements and environment controls, and disable all the alarm indications except for **Air Temperature Too High**, **Floor Temperature Too High**, **O2 Concentration Too Low**, **Reboot due to system error**, **No AC Power**, **Low Battery**, **Critically Low Battery**, **No Battery**. Pay attention to the potential risk of placing the device to standby.

4.10.1 Entering the Standby Mode

Perform the following procedure:

1. On the main screen, tap **More** > **Standby**.
2. Tap **OK**.

4.10.2 Exiting the Standby Mode

Do one of the following to exit standby mode:

- Tap **Restore** to exit the standby mode and resume the current animal monitoring and environment control settings.
- Tap **Discharge** to discharge the current animal.

When the device exists the standby mode, the alarms are paused for 2 minutes. Then the alarm system is activated.

5 Setup

The Setup function is designed to set the configuration parameters of operating the device and maintaining user workflow setup data.

On the main screen, tap the any information area to enter the details interface, and then tap **System** to enter the device maintenance menu.

Set parameters by operating interface controls:

- Tab: tap to switch to the corresponding tab page.
- Submenu button: tap to open the corresponding submenu.
- Drop-down list: tap to display the drop-down list, and then tap to select the corresponding option.
- Checkbox: tap to select or deselect an option.
- Text box/parameter value: input using the pop-up soft keyboard.

The modified parameter values are automatically saved.

5.1 System Setup

5.1.1 Setting the Audio

Item	Description
Alarm Volume	Set the volume.
High Alarm Volume	
QRS Volume	
Key Volume	
Reminder Volume	

5.1.2 Setting the Date and Time

CAUTION

Changing the date and time affects the storage of trends and events and may result in loss of data.

NOTE

If your device is connected to a central monitoring system (CMS), the date and time are automatically taken from the CMS. In this case, you cannot change the date and time from your device.

Item	Description
Date	Set the device date.
Time	Set the language for the device.
Date Format	Set the date format.
24-Hour Time	Set the time format.
Daylight Savings Time	Enable or disable the daylight savings time.

5.1.3 Adjusting the Screen Brightness

Item	Description
Brightness	Set the brightness of the touch screen.
Brightness On Battery	Set the brightness of the screen when it is powered by the battery.

5.1.4 Other Settings

Item	Description
Auto Screen Lock Time	Set the touchscreen lock period.

5.1.5 Setting Night Mode

The night mode is a special clinical monitoring mode. To avoid troubling the patient, turn on the night mode.

Category	Item	Description
Brightness	**Brightness**	Set the screen brightness in the night mode.
Audio	**All Mute**	Set silence the device in the night mode. In night mode, all the monitoring sounds, including the alarm tone, heartbeat tone, key tone, and prompt tone, will be turned off. Local password for accessing the maintenance menu is required for switching on **All Mute**.
	Alarm Volume	Set the alarm volume in the night mode. “0” indicates silence.
	QRS Volume	
	Key Volume	
	Reminder Volume	
NIBP	**NIBP End Tone**	Set to disable the reminder tone at the completion of NIBP measurement after entering the night mode.
	Stop NIBP	Set to stop the NIBP measurement after entering the night mode.
Auto Night Mode	**Auto Night Mode**	Set the device to automatically enter and exit the night mode.
	Night Time Period	Displays the current night mode period. **Notes: If needed, please enter the Time table in Maintenance Menu to modify the Night Time Period.**

5.1.6 Managing Configurations

When continuously monitoring an animal, the clinical professional often needs to adjust the device’s settings according to the animal’s condition. The collection of all these settings is called a configuration. You can change some settings from a certain set of configuration and then save the changed configuration as a user configuration.

WARNING

The configuration management function is password protected. The configuration management tasks must be performed by clinical professionals.

Loading Configurations

NOTE

The device may configure some settings by default when you load a configuration of different software version with the current configuration.

You may make changes to some settings during operation. However, these changes or the pre-selected configuration may not be appropriate for the newly admitted animal. Therefore, the device allows you to load a desired configuration to ensure that all the settings are appropriate for your animal.

Perform the following procedure:

1. Select the desired configuration:
   - Select the configuration on this device in the **Local** page.
   - Select the configuration on the USB drive in the **USB Drive** page.
2. Tap **Load**.

Setting Default Configuration

The device will load the pre-set default configuration in the following cases:

- An animal is admitted.
- An animal is discharged.
- Species is changed.

The default configuration can be the latest configuration, factory configuration or user configuration.

Perform the following procedure:

1. Tap **Config Manage**.
2. Input the required password, and then tap **OK**.
3. Tap **Select Default Config**.
4. Tap **Load the Latest Config** or **Load Specified Config**.
   - When you select **Load the Latest Config**, the latest configuration is loaded when the device is started or an animal is admitted
   - When you select **Load Specified Config**, the specific configurations are loaded when the device is started or an animal is admitted.

Saving Current Settings

Current settings can be saved as a user configuration.

Perform the following procedure:

1. Tap **Config Manage**.
2. Input the required password, and then tap **OK**.
3. Tap **Save Current Settings**.
4. Input the configuration name.
5. Tap **OK**.

Delete Configuration

Perform the following procedure:

1. Tap **Config Manage**.

2. Input the required password, and then tap **OK**.
3. Tap **Delete Configuration**.
4. Select the configuration you want to delete.
5. Tap **Delete**.
6. Tap **OK**.

Exporting a Configuration

Export the current device's configuration to a USB flash drive.

Perform the following procedure:

1. Connect the USB drive to the device's USB connector.
2. Tap **Config Manage**.
3. Input the required password, and then tap **OK**.
4. Tap **Export Configuration**.
5. Select the configurations and user maintenance settings to export.
6. Tap **Export**.

Importing a Configuration

Import the configuration from the USB drive to the device.

Perform the following procedure:

1. Connect the USB drive that has saved the configuration file to the device's USB port.
2. Tap **Config Manage**.
3. Input the required password, and then tap **OK**.
4. Tap **Import Configuration**.
5. Select the configurations and user maintenance settings to import.
6. Tap **Import**.

Modifying Configuration Password

You can modify the configuration password if necessary.

Perform the following procedure:

1. Tap **Config Manage**.
2. Input the required password, and then tap **OK**.
3. Tap **Modify Password**.
4. Input the old password and new password respectively.
5. Tap **OK**.

5.2 User Maintenance Settings

User maintenance enables you to customize your device to best meet your needs. Accessing the **Maintenance** menu is password protected.

CAUTION

The maintenance settings can only be changed by authorized personnel. Contact the Customer Service Department or your distributor for the passwords used at your facility.

NOTE

Factory Maintenance settings must be performed by service personnel.

Perform the following procedure:

1. On the main screen, tap the any information area to enter the details interface, and then tap **System** to enter the device maintenance menu.
2. Select desired tab.
3. Input the required password, and then select **OK**.

5.2.1 General Maintenance

Cabin Location

Item	Description
Device ID	Displays the device ID.
Cabin Name	Set the device name.
Facility	Set the facility name.
Department	Set the department name.
WLAN MAC	Displays the MAC Address of the wireless network adapter.
LAN MAC	Displays the MAC Address of the wired network adapter.
Room No	Set the room number of the device.
Bed No	

Patient Management

Category	Item	Description
Nursing Tags	**Advanced**, **Medium**, **Low**	Set the prompt content of the nursing tag. **TIP** Tap **Defaults** to restore to factory default.
Nursing Level Indicator	/	Set the nursing level names corresponding to nursing level indicators in different colors. **TIP** Tap **Defaults** to restore to factory default.
Discharge Patient	**Auto delete discharged patients when storage space is full**	Set whether animal data is deleted when the animal is discharged. When the storage space of the device is insufficient, the latest animal data will replace the earliest retained animal data. **TIP** The animal data will be deleted and unrecoverable, it is recommended to perform animal data backup before enabling this function to avoid data loss.
	Prompt on patient auto deleted	Set whether an alarm is issued when the device automatically deletes earlier discharged animal data.
	Prompt Alarm When Storage Is Nearly Full	Set whether an alarm is issued when the device memory is very low and the priority of this alarm.
	Include Patient Demographics When Exporting Patient Data	Set whether animal demographics is included when exporting the animal data.
	Auto Delete Patient Data if Discharged	Set whether delete patient data when discharge patient
	Clear All Patient Data	Deletes all animal information and data. Clearing animal data will discharge the current animal

Alarm

Category	Item	Description
Audible	**Minimum Alarm Volume**	Set the minimum alarm volume.
	Alarm Sound	Set the alarm tone pattern to distinguish the heart beat tone, pulse tone, and keystroke tone by frequency.
	High Alarm Interval	Set the interval between alarm tones for the ISO mode.
	Med Alarm Interval	
	Low Alarm Interval	
	Auto Increase Volume	if an alarm is not reset within the designated delay time after the alarm occurs, the alarm volume automatically increases. **TIP** The alarm volume escalation function is not applied to the latched alarms.
	Increase Volume Delay	Set the delay time of alarm volume escalation.
Pause/Reset	**Pause**	Set the pause function.
	Pause Time	Set the alarm pause time.
	Pause Priority	Set alarms of what priority can be paused.
	Pause 5 min	Set how long the alarm can be paused if switched on.
	Pause 10 min	
	Pause 15 min	
	Alarm Light	• **On When Reset**: when the alarm system is reset, the alarm tones of the current alarms are switched off, but the alarm lamp remains flashing. • **Off When Reset**: when the alarm system is reset, both the alarm tone and alarm lamp of the current alarms are switched off.
	Alarm Reset Reminder	Set the reminder tone rule when the alarm volume is set to 0, or the alarm is reset or switched off.
	Alarm Off Reminder	Set whether to remind when the alarm is switched off.
	Reminder Interval	Set the time interval of the reminder tone.
Latching	**Lethal**	Set alarm latching rules. • If **Visible** is selected, you can separately latch visual alarm signal. • Latching audible alarm signal simultaneously latches visual signal. • Selecting alarms of lower priority simultaneously latches higher priority alarms.
	Maximum	
	Med	
	Low	

Category	Item	Description
Others	**ECG Lead Off**	Set the priority of the ECG lead off alarm.
	SpO2 Sensor Off	Set the priority of the SpO_2 sensor off alarm.
	CMS/eGW Disconnected	Set the priority of the CMS disconnection alarm.
	Alarm Delay	• **1 sec** to **15 sec**: for continuously measured parameters, the device does not represent the alarm if the alarm condition is resolved within the designated delay time. • **Off**: an alarm is always presented. The delay time of the apnea alarm and ST alarm is not affected by the **Alarm Delay** setting.
	ST Alarm Delay	The device does not present the ST alarm if the alarm condition is resolved within the delay time.
	Lethal Arrhy Alarms Off	Set to enable or disable the lethal arrhythmia alarms. • **Disable**: lethal arrhythmia alarms cannot be switched off. • **Enable**: lethal arrhythmia alarms can be switched off from the ECG menu.
	SPO2 Desat Alarm Off	Set whether the SpO_2 Desat alarm can be switched off.
	Apnea Alarm Off	St to enable or disable the apnea alarm.
	Arrhy Shield Time	Alarm light and alarm tone will be disabled for designated period of time when certain arrhythmia alarms are detected. 0: disables this function.
	CMS/eGW Disconnected Alarm	Set whether an alarm is issued when the device is not connected or disconnected from the CMS. • **Off**: the **Offline** alarm is not presented when the device is not connected or disconnected from the CMS.
	High Humidity Alarm	Set to enable or disable the High Humidity alarm.
	Low Humidity Alarm	Set to enable or disable the low humidity alarm.
	Disable Night Mode	Set to enable or disable the night mode.
	Notify Alarm Change	Selects whether the device gives a prompt when alarm settings, including alarm limits, priorities, and switches, are changed from the CMS.
	Defaults	Tap to restore the default settings.

Review

Category	Item	Description
Tabs	**Tabular Trends**	Set whether to display in the **Review** menu.
	Graphic Trends	
	Event	
	Full Disclosure	
	ST	
Event	**Lethal**	Set the type of alarm events to be locked. The locked event cannot be deleted.
	Maximum	
	Med	
	Low	
	Rename Event	Set whether arrhythmia events can be renamed.

Category	Item	Description
Arrhy Mark	**Asystole**	Set whether the compressed ECG waveform segments for arrhythmia events are marked with a specific background color.
	V-Fib	
	V-Fib/V-Tach	
	V-Tach	
	Vent Brady	
	Extreme Brady	
	Extreme Tachy	
	PVCs/min High	
	Vent Rhythm	
	R on T	
	Multiform PVC	
	Pauses/min High	
	Run PVCs	
	Couplet	
	PVC	
	Bigeminy	
	Trigeminy	
	Tachy	
	Brady	
	Pacer Not Capture	
	Pacer Not Pacing	
	Missed Beat	
	Nonsus V-Tach	
	Pause	
	Irr Rhythm	
	SVT	
	SVCs/min High Restrain	
Export	**Export Patient Data**	Select desired animals from the animal list to export data of selected animals via a USB drive.
Save Path	**Storage Path**	Set the path to store review data. • **Local**: store review data locally in the device. • **USB Drive**: store review data in the U drive users plug into the device. When selecting this option, restart the device is required in order to make this option effective.

Print

Category	Item	Description
Printer	**Connection Type**	Set to output animal reports via the print server or a network printer.
	Printer IP Address	Set the printer IP address.
	Paper Size	Set the paper size to be printed.
	Printer Resolution	Set the resolution for the printer.
	Print Test Page	Test whether the printer works properly.
Print Server	**Print Server Address**	For print server only.
	Print Server IP Address	
	Port	
	General Report	• **Printer**: set the default printer (for paper report only). • **Printer Resolution**: set the resolution for the default printer (for paper report only). • **PDF Resolution**: set the resolution for the default printer (for PDF report only). • **Print Action**: set the default printer (for paper report only). • **Color Mode**: Set the default printer color.
	End Case Report	
	Print on Alarm Report	
	Print Test Page	Test whether the printer works properly.
Report Layout	/	Set the contents and location of the animal information.
PDF File Name	/	Set the name of PDF files. **N/A**: refers to no information.
Others	**Second Mark (Printer)**	Set whether to show second marks on the report output by the printer.

Unit

Item	Description
Weight Unit	Set the measurement unit for each parameter.
Temp Unit	
ST Unit	
BP Unit	
Infusion Pressure Unit	
Gas Supply Pressure Unit	

Time

Category	Item	Description
Time Synchronization	**Time Zone**	Set the time zone where the device belongs.
	Night Time Period	Set the night time for heart rate statistics.
	Start NTP Time Sync	Enable synchronizing the device time with the NTP server time.
	Intmt. Time	Set the time interval for synchronizing the device time with the NTP server time.
	Time Server Address	The domain name of the time server.
	Time Server	The IP address of the time server.
	Connection Status	Displays the connection status between this device and the NTP server.
	Network Test	Test whether the NTP server is properly connected.
Daylight Savings Time	**Auto Daylight Savings Time**	Set whether to automatically enable the daylight saving time.
	Daylight Savings Time Start	Set the start time of the daylight saving time.
	Daylight Savings Time End	Set the end time of the daylight saving time.

Others Settings

Item	Description
Mouse Sensitivity	/
Clear CMS IP at startup	/
Language	Set the device display language.
Screenshot	Set to enable or disable the screen capture function.
Manual Event Edit	Set whether selecting and editing the name of a manual event is allowed.

Authorization Setup

Category	Item	Description
/	**Automatic Logout Time**	Set timeout period of the MLDAP password for accessing the **Maintenance** menu, alarm settings and arrhythmia settings. If there is no operation after the specified timeout period is reached, you need to re-input the password.

Category	Item	Description
Maintenance	**User Maintenance**	Set the password for accessing the device's **Maintenance** menu. • **Local Password**: the device's password for accessing the maintenance menu is required. • **User Password**: the user name and password saved in the MLDAP server are required.
	Modify Local Password	Changes the device's password for accessing the maintenance menu.
Clinical Setting	**Alarm Setup**	Set the password for changing alarm settings.
	Arrhythmia	Set the password for changing arrhythmia settings.
	View Discharged Patients	Set the password for viewing discharged animals.
	Viewing Patient Review Data	Set the password for viewing discharged animals.
	Modify Local Password	Changes the device's clinical password.

Version

Displays device software version, module hardware and software version, and firmware version.

Network Setup

Category	Item	Description
Network Type	**Monitoring**	Set what kind of network your device will use.
LAN1 IP	**Obtain IP Address Automatically**	Automatically gets the IP address.
	Use the Following Address	Manually input the IP address.
	IP Address	
	Subnet Mask	
	Gateway	
	Obtain DNS address automatically	Automatically gets the DNS address.
	Using the Following DNS Address	Manually input the DNS address.
	Preferred DNS Server	
	Alternate DNS Server	
WLAN	**Available Network List**	Displays available wireless network list.
	Certificate Management	Manage wireless network certificates.
	Add WLAN	Add wireless network and set the network in the pop-up menu.

Category	Item	Description
Central Station Setup	**Select CMS**	Set whether to enable the CMS selection function for your device.
	Add Local CentralStation	Input the name, and server address of the local CMS.
	Add Cloud CentralStation	Input the name, server address, user name and password of the CMS of the cloud CMS.
Device Discover	**Multicast TTL**	Set multicast parameters so that between different devices and between devices and CMS can mutually discover each other. Devices in the same multicast group can be mutually discovered.
	Multicast Address	
	Master Server Address	
	Master Server IP Address	
	Connected Status	
	Network Test	Test whether the master server is properly connected.
QoS	**QoS Level For Realtime Monitoring**	Set the service quality of network connection for realtime monitoring, for example parameter measurements and waveforms, alarms, and so on.
	QoS Level For Others	Set the service quality of network connection for non-realtime monitoring, for example history data, printing, and as on.
HL7 Configuration	**Server Address**	Input the name or IP address for the server receiving the realtime data and waveform.
	Destination IP	
	Port	/
	Send Data	/
	Data Interval	/
	Send Waveforms	/
	Send Alarms	/
	HL7 Protocol Version	Set the version of the HL7 protocol.
Information Security	**Encryption Connection Type**	• **Only Private Encryption**: Mindray Animal Medical private encryption is used to encrypt the transmitted data. You cannot connect devices supporting SSL (secure sockets layer) encryption. • **SSL Encryption Priority**: for devices supporting SSL encryption, SSL encryption is used when connecting the devices. For devices not supporting SSL encryption, private encryption is used when connecting the devices.
	Broadcast Patient Demographics	Set whether the animal information is displayed in the remote device list. • **On**: when viewing other animals, device location and animal information of remote devices are displayed in the remote device list. • **Off**: animal information does not display in the remote device list.

Category	Item	Description
MLDAP	**Server Address**	Input the name or IP address for the MLDAP server.
	IP Address	
	Port	/
	Network Test	Test whether the device is properly connected with the MLDAP server.

5.2.2 Monitoring Maintenance

Category	Item	Description
ECG	**ECG Standard**	Set the ECG standard according to the leadwires you are using.
	QTc Formula	Set the QTc formula used to correct the QT interval for heart rate. • Hodges: $QTc = QT + 1.75 \times (HeartRate - 60)$ • Bazett: $QTc = QT \times \left(\frac{HeartRate}{60}\right)^{\frac{1}{2}}$ • Fridericia: $QTc = QT \times \left(\frac{HeartRate}{60}\right)^{\frac{1}{3}}$ • Framingham: $QTc = QT + 154 \times \left(1 - \frac{60}{HeartRate}\right)$
	Notch Filter	Set notch filter frequency according to the power line frequency of your country.
	Calibrate	Tap this button to start the ECG calibration.
SpO2	**SpO2 Tone**	Set the SpO_2 tone mode. The device adjusts the QRS tone (pitch tone) according to the SpO_2 values. The same SpO_2 tone mode shall be used for the same devices in a single area.

Category	Item	Description
NIBP	**NIBP Accuracy Test**	The NIBP accuracy test should be performed once every 2 years or when you doubt the NIBP measurements. The NIBP accuracy test should be performed by Mindray Animal Medical-qualified service personnel only.
	NIBP Leakage Test	The NIBP leakage test checks the integrity of the device and of the valve. The NIBP leakage test should be performed once every 2 years or when you doubt the NIBP measurements. The NIBP leakage test should be performed by Mindray Animal Medical-qualified service personnel only.
	NIBP Timeout	The measurements become outline fonts after a preset time. This avoids older values being misinterpreted as current measurements.
Others	**Parameters On/Off Config Influenced**	Set whether the settings of parameter switches are influenced by configuration.
	Parameters On/Off Protected	Set whether setting parameter switches is password protected.
	Parameters On/Off	Set what parameters can be monitored.
	Outline Font for Suspected Values	Set whether unreliable HR and SpO_2 measurements are displayed in outline font. This prevents unreliable measurements from being misinterpreted as normal measurements,

5.2.3 Infusion Maintenance

Category	Item	Description
Accuracy Calibration	**Edit**	Edit calibration data.
	Accuracy Calibration	Contact the Customer Service Department or your local distributor.
Pressure Calibration	**Pressure Calibration**	
Brand Management	**Common Brand**	Set the common brands to be displayed in the brand list.
	Edit	Edit the brand library.
	Delete	
	Add	
	Import	
	Export	

Category	Item	Description
Other	**Purge Limit**	Set the maximum volume of the purge. The purge stops when the set volume is reached.
	Para. Memory	Set whether to enable parameter memory function. Set the parameter memory switch. If this switch is turned on, the device can automatically reload the infusion mode and other infusion parameters when restarted if the same drug has been selected.
	Block Restart	Set whether to restart the infusion or not when the occlusion pressure is reduced.
	Brand Selection	Set whether the brand list will be displayed after the infusion set is loaded or replaced.

5.2.4 Environment Maintenance

Category	Item	Description
Environment Mode	**Display**	Set whether display in the environment mode menu.
	Name	Displays the name of the environment mode.
	Parameters	Displays the preset value of the environment mode.
	Edit	Tap the edit the preset value of the environment mode.
	Defaults	Tap to restore the environment values to the factory default.
Smart Adjustment Prompts	**Display**	Set whether to display in the **Smart Adjustment Prompts** menu.
	Trigger Condition	Set the trigger condition for the smart adjustment prompt.
	Recommended Target Value	Set the adjustment target in the smart adjustment prompt.
	Ignore Time Length	Set the ignore time period for the smart adjustment prompt.
	Defaults	Restore the trigger conditions and display settings to the factory defaults.
Water Tank	**Descaling Reminder**	Set to enable or disable the descaling reminder.
	Reminder Cycle	Set the reminder cycle for descaling.
	Last Descaling Time	Displays the completion date of last descaling.
	Next Descaling Reminder Time	Displays the next descaling date.
	Descaling	Tap to start to perform descaling.
	Drain condensate	Tap to start to drain condensate.
	Tank Drainage	Tap to start to drain water tank.
	Auto Drain Switch.	Set whether to perform the condensate drainage procedure automatically.

Category	Item	Description
CO2 Zero Calibration	**CO2 Zero Calibration Reminder**	Set to enable or disable the reminder for the CO_2 zero calibration.
	Reminder Cycle	Set the reminder cycle for the CO2 zero calibration.
	Last CO2 Zero Calibration Time	Displays the completion date of last CO_2 zero calibration.
	Next CO2 Zero Calibration Reminder Time	Displays the next date for the CO_2 zero calibration.
Others	**Air Circulation State Changed Prompt**	Set whether to display the prompt when the air circulation state is changed.
	Smart Fast O2 Mode	Set whether to automatically enable **Smart Fast O2 Mode** when meeting the required conditions.

5.3 Learning and Demo

Item	Description
Operation Guides	View the operation guides.
Demo	Enter demo mode after inputting the password.

5.4 About

View the device software version, copyright statement and other information.

6 Managing Animals

WARNING

- Always discharge the previous animal before starting monitoring a new animal. Failure to do so can lead to data being attributed to the wrong animal.
- Before starting monitoring a new animal, check if the setting is correct for your animal.

6.1 Admitting an Animal

Perform the following procedure:

1. The device admits a new animal in the following situations:
   - After startup, the device automatically enters the **Admit New Patient** interface.
   - After the patient is manually discharged, the device automatically enters the **Admit New Patient** interface.
2. Input animal information.

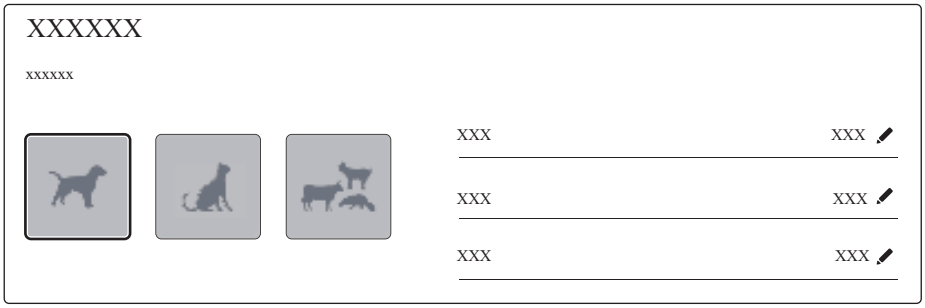

3. Select an appropriate environment mode.

   Make sure that the selected environment mode matches the animal's condition.

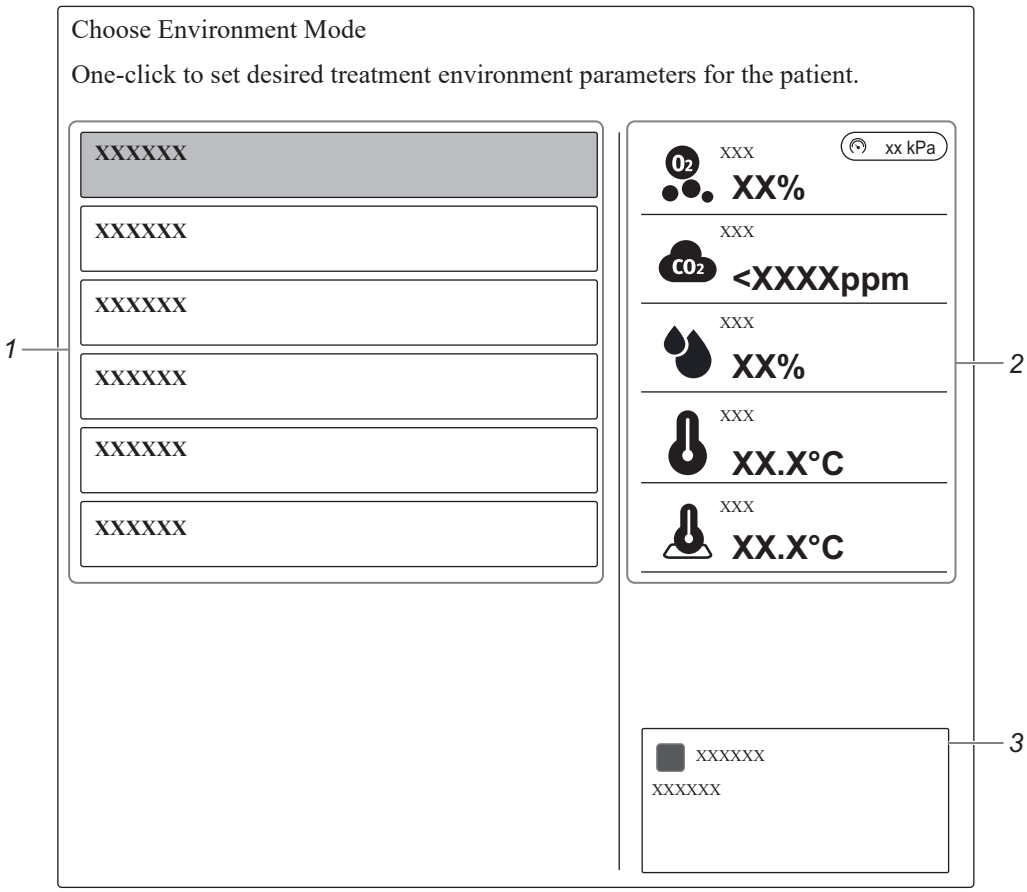

1.	List of default therapy environment modes
2.	Preset parameter values of the selected environment mode
3.	Set to suspend the oxygen supply function of the selected environment mode When the cabin door is closed, a confirmation dialog for oxygen supply is displayed.

4. Tap **Enter** to start the animal care.

6.2 Editing Animal Information

Perform the following procedure:

1. On the main screen, tap the patient information area to enter the **Patient** detail screen.

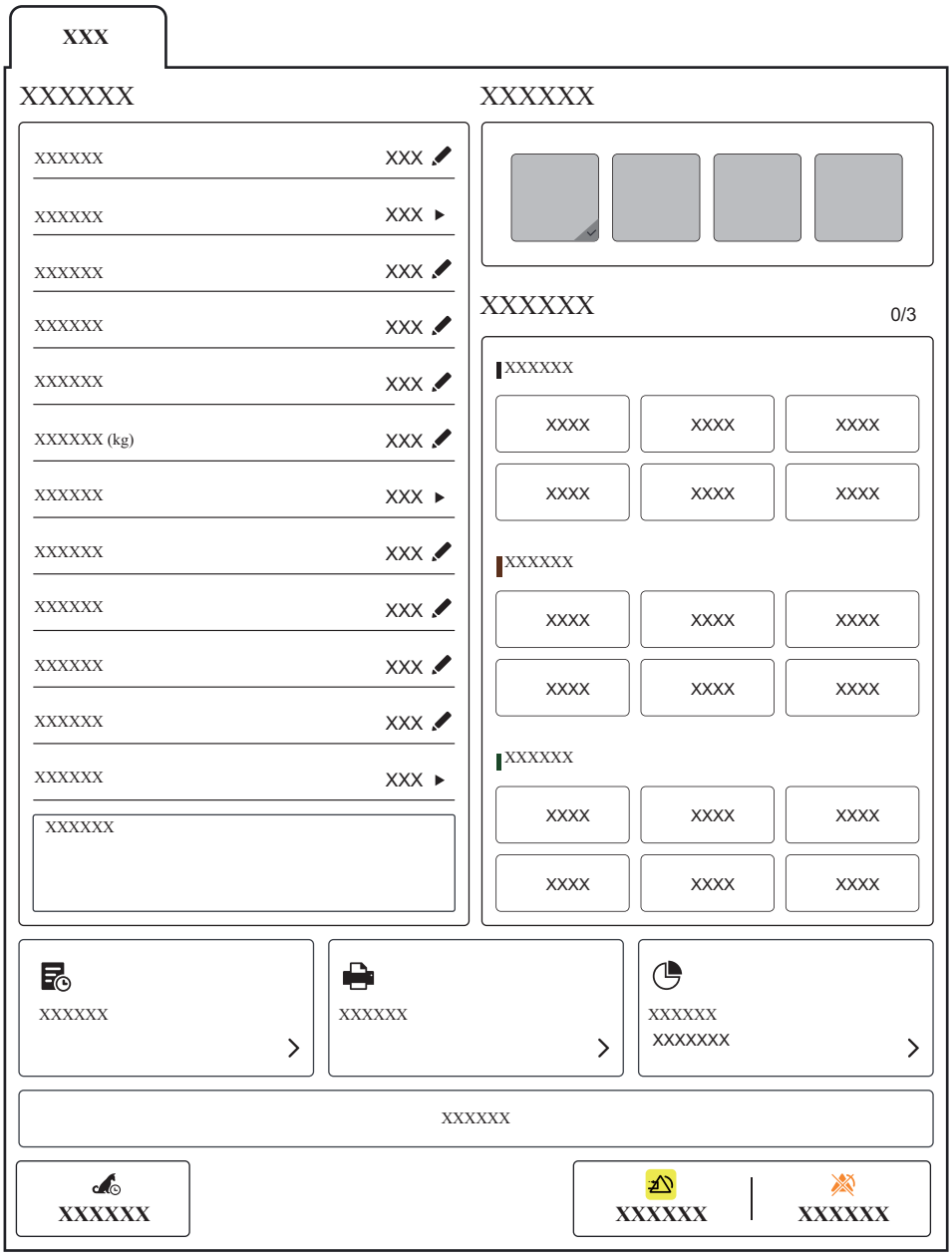

Use the controls on the interface to edit the animal information. The device automatically saves the edited information.

2. Tap **Home** to return to the main screen.

6.3 Discharging an Animal

WARNING

Do not discharge the animal during infusion or nebulization.

Before monitoring a new animal, discharge the previous animal. After the animal is discharged, the technical alarms are reset, and device settings return to their defaults.

Perform the following procedure:

1. To manually discharge an animal, choose any of the following ways:
   - Swipe down the touchscreen with two fingers.
   - On the main screen, tap the patient information area to enter the **Patient** details interface, and then tap **Discharge Patient**.
2. Select from the pop-up dialog box:

   Print End Case Report: prints the end case report when the animal is discharged.
3. Tap **OK** to discharge the current animal.

   After the animal is manually discharged, the device automatically enters the Admit New Patient screen. For detailed information, see **6.1 Admitting an Animal**.

7 Alarms

7.1 Safety Information

WARNING

- A potential hazard can exist if different alarm presets and default configuration settings are used for the same or similar devices in the same care area, for example, an intensive care unit or cardiac operating room.
- If the device is connected to the central monitoring system (CMS), alarms can be presented and controlled remotely. Remote suspension, inhibition, or reset of device alarms via the CMS may cause a potential hazard. For more information, see the Operator’s Manual of the CMS.
- The devices in the care area may each have different alarm settings to suit different animals. Before starting monitoring, check that the alarm settings are appropriate for the animal. Always make sure that necessary alarm limits are active and set according to the animal's clinical condition.
- Setting alarm limits to extreme values may cause the alarm system to become ineffective.
- When the alarm sound is switched off, the device gives no alarm tones even if a new alarm occurs. Be careful about whether to switch off the alarm sound or not. When the alarms are off or while alarm audio is paused either temporarily or indefinitely, observe the animal frequently.
- When monitoring animals that are not continuously attended by a clinical operator, properly configure the alarm system and adjust alarm settings as per the animal's condition.
- Do not exclusively rely on audible alarms for animal monitoring. Adjusting alarm volume to a low level or turning off alarm sound may result in animal hazards. Always make sure that the audio alarm volume level is adequate in your care environment. Always keep the animal under close surveillance.

NOTE

When the alarm system is powered off, the device will save the alarms before power-off. The stored alarm information does not change with the power-off time.

7.2 Understanding the Alarms

7.2.1 Alarm Categories

The device has two different types of alarms: physiological alarms and technical alarms.

- Physiological alarms: triggered by animal measurement exceeding the parameter limits, or by an abnormal animal's condition.
- Technical alarms: triggered by an electrical, mechanical, or other device failure, or by failure of a sensor or component. Technical alarm conditions may also be caused when an algorithm cannot classify or interpret the available data.

Apart from the physiological and technical alarms, the device can also prompt some messages telling the device status or animal status.

7.2.2 Alarm Priorities

By severity, the alarms are classified into the following priority levels:

- High priority alarms: indicates a life threatening situation or a severe device malfunction. High priority alarms require an immediate response.
- Medium priority alarms: indicates abnormal vital signs or a device malfunction. Medium priority alarms require a prompt response.
- Low priority alarms: indicates a discomfort condition, a device malfunction, or an improper operation. Low priority alarms require you to be aware of this condition.
- Messages: provides additional information on the animal or the device.

7.2.3 Alarm Indicators

When an alarm occurs, the device indicates it to you through visual or audible alarm indications. For more information, see the following table.

Alarm Indicator	High Priority Alarm	Medium Priority Alarm	Low Priority Alarm	Message	Description
Alarm lamp	Red Flashing frequency: 1.4 Hz - 2.8 Hz; Duty cycle: 20% - 60%	Yellow Flashing frequency: 0.4 Hz - 0.8 Hz; Duty cycle: 20% - 60%	Cyan No flashing, Duty cycle: 100% on	None	None

Alarm Indicator	High Priority Alarm	Medium Priority Alarm	Low Priority Alarm	Message	Description
Audible tone pattern: ISO	Repeat pattern of 2 x 5 beep tones Repeat pattern of triple beeps Single beep Repeat pattern of 2 x 5 beep tones Repeat pattern of 2 x 5 beep tones Single beep	Repeat pattern of 3-beep tones	1-beep tone	None	The alarm tone is different from the heartbeat, pulse, and keystroke in frequency.
Alarm message	White text inside a flashing red box	Black text inside a flashing yellow box	Black text inside a flashing cyan box	White text	Alarm messages are displayed in the alarm information area at the top of the screen. You can select the alarm messages to show the alarm list.
Alarm Level	!!!	!!	!	None	The indicator shows in front of corresponding alarm message.
Parameter value	White text inside a flashing red box	Black text inside a flashing yellow box	Black text inside a flashing yellow box	None	None

NOTE

- When multiple alarms of different priority levels occur simultaneously, the device selects the alarm of the highest priority to light the alarm lamp and issues the alarm tone.
- When multiple technical alarms of different priority levels occur simultaneously and should be displayed in the same area, the device only displays the messages of the highest priority alarm.
- When multiple physiological alarms of different priority levels occur simultaneously and should be displayed in the same area, the device displays the high priority alarm, while the medium and low priority alarms are displayed circularly.
- When multiple alarms of the same priority levels occur simultaneously, alarm messages are displayed circularly.
- Lethal arrhythmia alarms, apnea, and SpO_2 Desat are exclusive high priority alarms. When these alarms occur, the device only displays messages of exclusive alarms. Other high priority alarms will

not be displayed. When multiple exclusive alarms occur simultaneously, alarm messages are displayed circularly.

7.2.4 Alarm Status Symbols

The device uses the following symbols to indicate the alarm status:

Symbols	Description
	indicates that all the alarms are paused.
	indicates that individual measurement alarms are turned off or the system is in the alarm off status.
	indicates that audible alarm tones are paused.
	indicates that audible alarm tones are turned off.
	indicates that the alarm system is reset.

7.2.5 Accessing On-screen Help for Alarms

In the alarm list, if the message is displayed after alarm messages, the alarm contains help messages or pictures to help you identify the problem.

Perform the following procedure:

1. Tap the alarm message area to open the **Alarm** menu.
2. Tap the corresponding alarm module tab.
3. Select the desired alarm from the alarm list.

7.3 Changing Alarm Settings

Set the alarm properties in a centralized manner.

7.3.1 Setting parameter alarms

Perform the following procedure:

1. Enter the **Monitoring** details interface. Tap **More** > **Alarm Setup** quick keys.
2. Select a parameter tab and set alarm properties as desired.

   You can also change the alarm properties of individual parameter from corresponding parameter menu.

7.3.2 Initiating Auto Alarm Limits

The device provides the auto alarm limits function to automatically adjust alarm limits according to the animal's vital signs using. When auto limits are selected, the device calculates safe auto limits based on the latest measured values.

To get accurate auto alarm limits, you need to collect a set of measured vital signs as a baseline.

Perform the following procedure:

1. Enter the **Monitoring** details interface, and then do any of the following to open the **Limits** menu.
   - Tap **More** > **Alarm Setup** quick keys, and then tap **Limits** tab.
   - Tap **Monitoring Setup** quick key, then select **Limits** from the **Alarm Setup** column.
2. Tap **Auto Limits**.
3. Select **OK** from the popup dialog box.

The device will automatically calculate alarm limits basing on the latest measured values. These alarm limits will remain unchanged until you select auto limits again or adjust them manually. Before applying these automatically created alarm limits, confirm if they are appropriate for your animal. If not, you can adjust them manually.

The device calculates auto limits basing on the following rules:

Module	Parameter	Lower Limit	Upper Limit	Auto Limit Range
ECG	HR/PR (bpm)	(HR - 30) or 90 (whichever is greater)	(HR + 40) or 200 (whichever is smaller)	55 to 225
Resp	RR (rpm)	(RR - 10) or 30 (whichever is greater)	(RR + 25) or 85 (whichever is smaller)	10 to 90
SpO_2	SpO_2(%)	Same as the default alarm limit	Same as the default alarm limit	Same as the measurement range

Module	Parameter	Lower Limit	Upper Limit	Auto Limit Range
NIBP	NIBP-S (mmHg)	(SYS x 0.68 + 10)	SYS x 0.86 + 38	• Weight >23kg or >50 lb:45 to 270 • Weight 10 to 23 kg or 21 to 50 lb: 45 to 185 • Weight <10 kg or <21 lb:45 to 185
	NIBP-D (mmHg)	(Dia x 0.68 + 6)	(Dia x 0.86 + 32)	• Weight >23kg or >50 lb:25 to 225 • Weight 10 to 23 kg or 21 to 50 lb: 25 to 150 • Weight <10 kg or <21 lb:25 to 150
	NIBP-M (mmHg)	(Mean x 0.68 + 8)	(Mean x 0.86 + 35)	• Weight >23kg or >50 lb:30 to 245 • Weight 10 to 23 kg or 21 to 50 lb: 30 to 180 • Weight <10 kg or <21 lb:30 to 180
Temp (xx indicates temperature site)	Txx (°C)	(Txx - 0.5)	(Txx + 0.5)	1 to 49

7.3.3 Setting the Alarm Delay Time

For continuously measured parameters, you can set the alarm delay time. If the alarm condition is resolved within the delay time, the device does not present the alarm. This setting is password protected.

The delay time of the apnea alarm and ST alarm is not affected by the Alarm Delay time setting.

NOTE

The **Alarm Delay** can be set to a maximum of 15 seconds. Changing this setting to an inappropriate level could result in a hazard to the animal.

7.3.4 Setting the Apnea Delay Time

Perform the following procedure:

1. Enter the **Monitoring** details interface, and then do any of the following to open the **Limits** menu.
   - Tap **More** > **Alarm Setup** quick keys, and then tap **Setup** tab
   - Tap **Monitoring Setup** quick key, then select **Setup** from the **Alarm Setup** column.
2. Select **Apnea Delay** to set the apnea delay time.

7.3.5 Restoring the Default Alarm Settings

Perform the following procedure:

1. Enter the **Monitoring** details interface, and then do any of the following to open the **Limits** menu.
   - Tap **More** > **Alarm Setup** quick keys, and then tap **Limits** tab.
   - Tap **Monitoring Setup** quick key, then select **Limits** from the **Alarm Setup** column.
2. Tap **Defaults**.
3. Select **OK** from the popup dialog box.

7.3.6 Setting the Length of Printed Waveforms

You can define the length of printed waveforms when an alarm is triggered. To do so, follow this procedure:

1. Enter the **Monitoring** details interface, and then do any of the following to open the **Limits** menu.
   - Tap **More** > **Alarm Setup** quick keys, and then tap **Setup** tab
   - Tap **Monitoring Setup** quick key, then select **Setup** from the **Alarm Setup** column.
2. Tap **Printing Duration On Alarm**.

7.4 Pausing Alarms/Pausing Alarm Tones

WARNING

Pausing or switching off alarms may result in a hazard to the animal.

7.4.1 Defining the Pause Function

You can either pause alarms or pause alarm tones. This depends on the pause setting. This setting is password protected

7.4.2 Pausing Alarms

If the pause function is designated as pausing alarms, selecting the **Alarm Pause** quick key can temporarily disable alarm indicators. When alarms are paused, the following rules are followed:

- No physiological alarm will be presented.
- Except battery-related technical alarms, sounds of other technical alarms are paused, but alarm lamps and alarm messages remain presented.
- The remaining alarm pause time is displayed in the physiological alarm information area.
- The alarm pause symbol is displayed in the system information area.

When the alarm pause time expires, the alarm paused status is automatically deactivated. You can also tap **Alarm Pause** quick key to cancel the alarm pause manually.

The following alarm pause and alarm reset settings are password protected:

- Alarm pause time
- Priorities of paused alarms
- Alarm reset setting
- Reminder tone settings

7.4.3 Switching Off All Alarms

If the pause function is designated as pausing alarms and **Pause Threshold** is set to **Permanent**, tap **Alarm Pause** quick key to switch off all alarms. The alarm off status has the following features:

- Physiological alarms are switched off. The alarm lamp does not flash and alarm sound is not issued.
- Alarm sound of technical alarms is switched off, but alarm lamp flashes and alarm messages are presented.
- The message **Alarm Off** with red background is displayed in the physiological alarm information area.
- The alarm off symbol is displayed in the system status information area.

To exit the alarm off status, tap **Alarm Pause** quick key again.

7.4.4 Pausing Alarm Sound

If the pause function is defined as **Audio Pause**, and when alarm tones are paused, the following rules are followed:

- The sound of all physiological alarms and technical alarms are switched off.
- The remaining audio pause time is displayed in the physiological alarm information area.
- The audio pause symbol is displayed in the system information area.

When the audio pause time expires, the audio paused status is automatically deactivated.

7.5 Resetting Alarms

Pressing the **Alarm Reset** quick key to reset the alarm system. When the alarm system is reset, the alarm reset symbol displays in the system status information area for alarm symbols.

NOTE

If a new alarm is triggered after the alarm system is reset, the alarm reset icon will disappear and the alarm light and alarm tone will be reactivated.

7.5.1 Resetting Physiological Alarms

Physiological alarms give different alarm indicators when the alarm system is reset:

- The alarm sound is silenced.
- A √ appears before the alarm message.
- The color of the parameter numeric background corresponds with the alarm priority, but the parameter numeric does not flash.

7.5.2 Resetting Technical Alarms

Technical alarms give different alarm indicators when the alarm system is reset:

- Some technical alarms are cleared. The device gives no alarm indications.
- Some technical alarms are changed to the prompt messages.
- For some technical alarms, the alarm is silenced and a √ appears before the alarm message.

7.6 Latching Alarms

Physiological alarms can be set to enable or disable **Latching**.

- Disable **Latching**: indications of physiological alarms disappear when the alarm condition ends.
- Enable **Latching**: all visual and audible alarm indications remain until you reset the alarms. For latched alarms the time when the alarm is last triggered is displayed behind the alarm message.

You can separately latch visual indications or simultaneously latch the visual and the audible indications.

- When visual indications are latched, visual indications, including alarm lamp, alarm message and its background remain when the alarm condition ends and the time when the alarm last triggered is displayed behind the alarm message.
- When audible indications are latched, the device issues alarm sounds when the alarm condition ends.

NOTE

- Changing alarm priority may affect the latching status of corresponding alarm. Determine if you need to reset the alarm latching status if you changed the alarm priority.
- When the alarm system is reset, latched physiological alarms are cleared.

7.7 Testing Alarms

The device automatically performs a selftest at startup. Check that an alarm tone is heard, the alarm lamp illuminates, one after the other, in red, yellow, and cyan. This indicates that the visible and audible alarm indicators function correctly.

To further test individual measurement alarms, perform measurements on yourself or using a simulator. Adjust alarm limits and check that appropriate alarm behavior is observed.

7.8 Actions When an Alarm Occurs

When an alarm occurs, observe the following steps and take proper actions:

1. Check the animal’s condition.
2. Confirm the alarming parameter or alarm category.
3. Identify the source of the alarm.
4. Take proper action to eliminate the alarm condition.

5. Make sure the alarm condition is corrected.

8 Environment Control

WARNING

Make sure that the settings of environmental parameters match the animal's condition.

8.1 Setting the Oxygen Concentration

This device provides high-pressure and low-pressure oxygen supply connectors.

WARNING

- Use SpO_2 monitoring for animals who are dependent only on an increased defined O_2%. Otherwise, a deterioration in the animal's condition may not be recognized.
- Insufficient source pressure may cause inaccurate control of oxygen concentration
- Ensure the high-pressure oxygen supply is sufficient so as not to affect the operation of other devices.
- The device must be used under the supervision of qualified medical staff, so that help is immediately available if malfunctions occur or the patient has insufficient spontaneous breathing.
- When the oxygen concentration target is set too high, if the oxygen supply capability of the gas source is insufficient, the oxygen concentration target may not be achieved.
- The gas supply pressure range of the high-pressure oxygen source is 200 kPa to 600 kPa, and the gas supply pressure range of the low-pressure oxygen source is 0 to 220 kPa. If the pressure range of the oxygen supply is not within the allowable range, device damage may be caused.

CAUTION

- To prevent possible animal injury, use the low-pressure oxygen supply only when it can provide sufficient oxygen.
- To prevent possible animal injury, ensure that an emergency backup oxygen supply (such as a gas cylinder) is available in case the low-pressure oxygen supply fails.
- The low-pressure oxygen hose assembly shall comply with the requirements of ISO 5359.

- To ensure the accuracy of oxygen concentration monitoring, contact the Customer Service Department or your distributor for regular maintenance of the oxygen flow sensor.

NOTE

When the cabin door is opened or emergency ventilation is enabled, the oxygen supply is automatically stopped. The oxygen supply will be automatically restored after the cabin door is closed or ventilation is terminated.

Perform the following procedure:

1. On the main screen, tap the environment information area to enter the **Environment** details interface.
2. Use the controls in the **O2** area to set the target values.

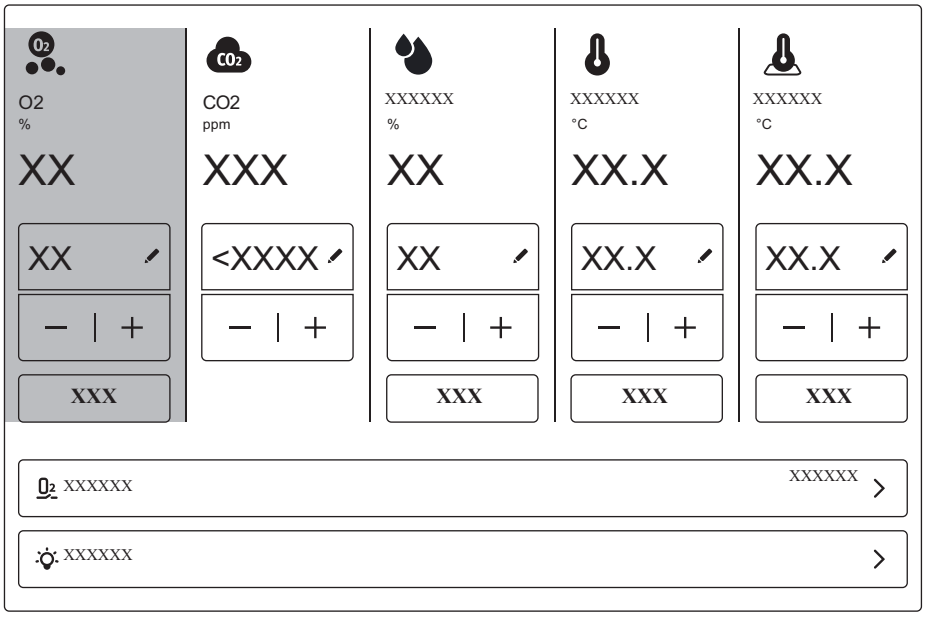

3. Tap **Start** to enable oxygen delivery.
   - When the high-pressure oxygen source is connected: the real-time oxygen value ≤ target oxygen value -1.5%, start oxygen supply; the real-time oxygen value is greater than or equal to the target oxygen value, and the oxygen supply is stopped.
   - When the low-pressure oxygen source is connected: The real-time oxygen value ≤ target oxygen value -1.5%, start oxygen supply; the real-time oxygen value is greater than or equal to the target oxygen value +1.5%, and the oxygen supply is stopped.
   - When connecting the oxygen generator: after the oxygen delivery is enabled, the device adjusts the internal oxygen concentration by using the emergency ventilation switch and fan speed.
4. Tap **Home** to return to the main screen.

The current oxygen concentration inside the device and the target oxygen concentration are displayed in the environment information area.

Smart Fast O_2 Mode

NOTE

Before use, enable the **Smart Fast O2 Mode** from the **Environment Maintenance** menu, see **5.2.4 Environment Maintenance**.

When the high-pressure oxygen source is connected, if target oxygen value – real-time oxygen value ≥ 3% and target oxygen value ≥30%, the device will automatically start **Smart Fast O2 Mode** to quickly increase the internal oxygen concentration.

During **Smart Fast O2 Mode**, when target oxygen value – real-time oxygen value ≤2%, the device will exit the **Smart Fast O2 Mode** and enter the general oxygen supply mode.

Accumulated Oxygen Volume

On the main screen, tap the environment information area to enter the **Environment** details interface. You can view the current animal's oxygen usage amount and usage time in the **Accumulated O2 Volume** area.

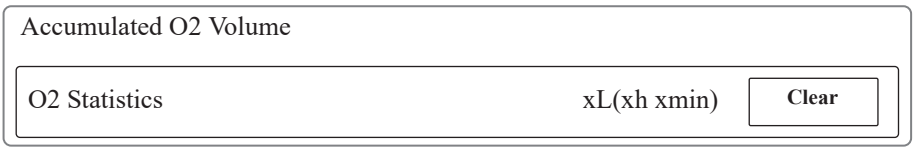

Tap **Clear** to pop up the confirmation dialog box. Tap **Clear** to manually clear the oxygen volume.

The oxygen volume will be automatically cleared after the current animal is discharged.

8.2 Setting the Atmosphere Temperatures

WARNING

- If the target value of the air temperature and floor temperature exceeds 40℃, pay attention to prevent scalds.
- The air cooling function is enabled only when the target air temperature is lower than the current air temperature.
- The floor cooling function is enabled only when the target floor temperature is lower than the current floor temperature.

The device supports the adjustment function of air temperature and floor temperature in the cabin to meet the temperature care requirements of animals.

Perform the following procedure:

1. On the main screen, tap the environment information area to enter the **Environment** details interface.
2. Use the controls in the **Air Temp** and **Floor Temp** areas to set the target values.

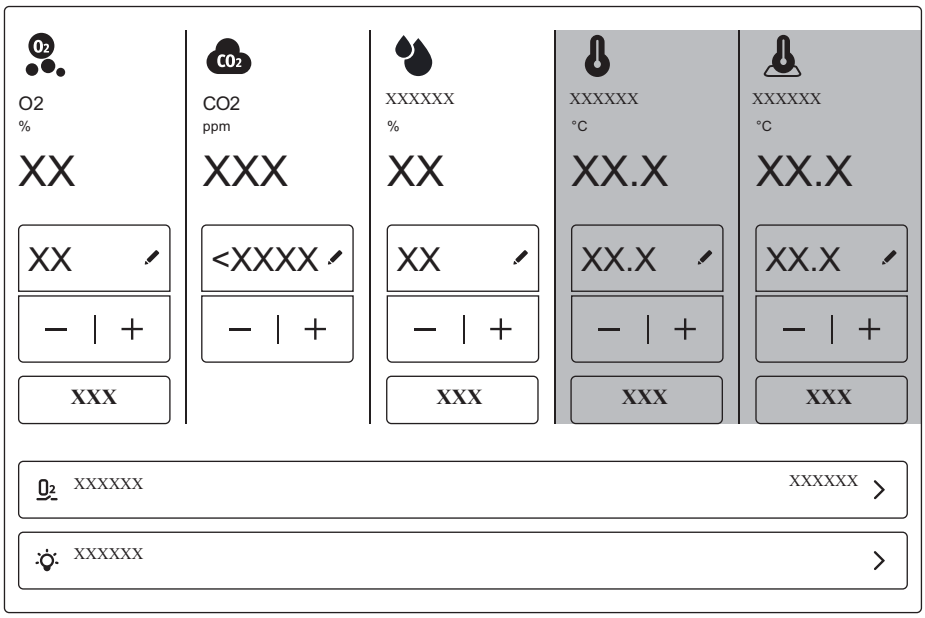

3. Tap **Start** to start the temperature adjustment function.
4. Tap **Home** to return to the main screen.

   The current temperature and the target temperature are displayed in the environment information area.

8.3 Setting the Atmosphere Humidity

WARNING

In order to prevent too much condensed water from generating on the inner shell of the device, the dehumidification function will be automatically enabled if the humidity in the device is high and the inner shell temperature is too low after the device is powered on.

Perform the following procedure:

1. On the main screen, tap the environment information area to enter the **Environment** details interface.
2. Use the controls in the humidity area to set the target value.

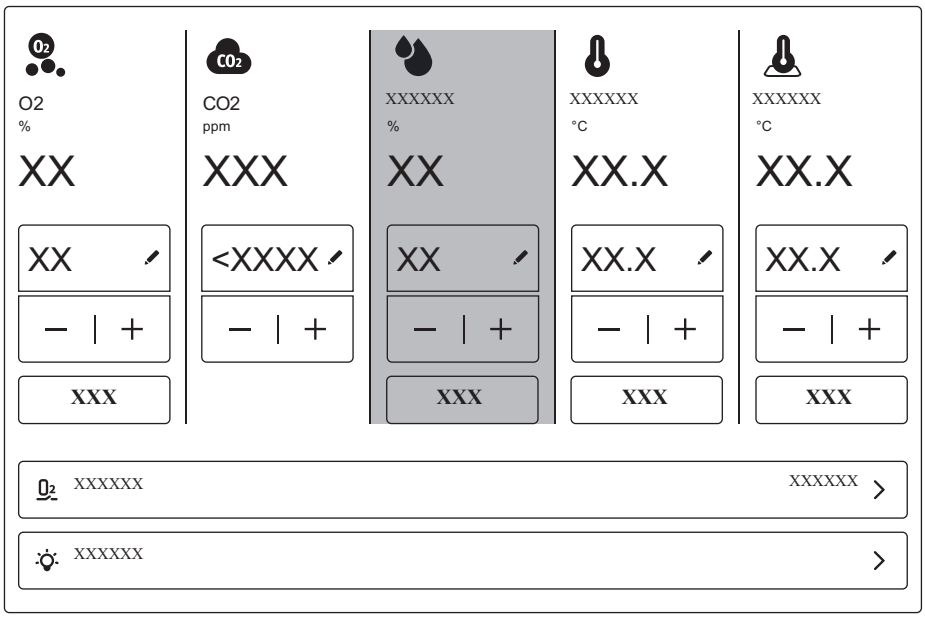

3. Tap **Start** to start the humidity adjustment function.
4. Tap **Home** to return to the main screen.

   The current humidity and the target humidity are displayed in the environment information area.

8.4 Setting the CO_2 Concentration

WARNING

Single use items may be considered potential biologically hazardous items and should not be reused. Dispose of these items in accordance with hospital policy and local regulations for contaminated and biologically hazardous items.

NOTE

- Install soda lime as needed before the first use of the device.
- Inspect the color of the soda lime in the CO_2 absorber canister. Replace the soda lime immediately if obvious color change is detected.

Perform the following procedure:

1. On the main screen, tap the environment information area to enter the **Environment** details interface.
2. Use the controls in the **CO2** area to set the target values.

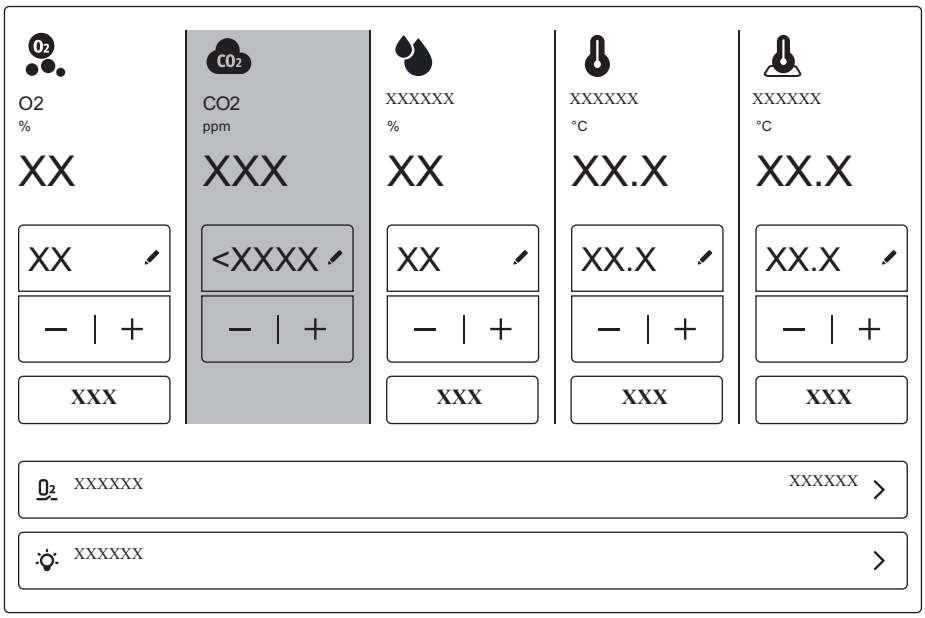

3. Tap **Home** to return to the main screen.

The current CO_2 concentration and the target CO_2 concentration are displayed in the environment information area.

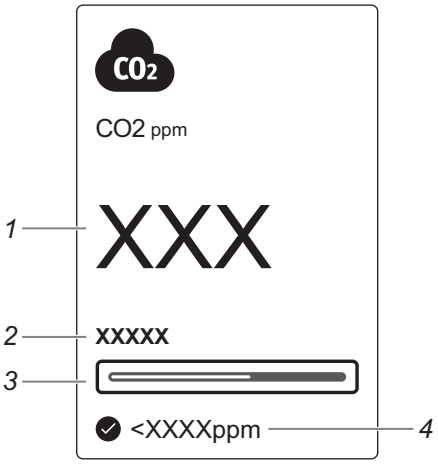

1.	Current CO_2 concentration inside the device
2.	Indication text of the current CO_2 concentration status
3.	Indication bar of the current CO_2 concentration status • **A white progress bar indicates that the CO2 concentration is below the target value.** The ✓ icon appears before the target value. • **A yellow progress bar indicates that the CO2 concentration is equal to or greater than the target value and that active CO2 absorption is automatically enabled (not applicable to external circulation).** • **A full yellow progress bar indicates that the CO2 concentration exceeds the automatic ventilation alarm limit and that ventilation is automatically started.**
4.	Target CO_2 concentration value

8.5 Auxiliary Functions

8.5.1 Nebulization

WARNING

- Install the specified nebulizer.
- Pay attention to the connection of the nebulizer during operation in case of interruption of nebulization.

CAUTION

- To avoid corrosion of components inside the device by the atomizing liquid, after the nebulization is enabled, the controls of air temperature, humidity, O_2 concentration and CO_2 concentration is suspended and manual ventilation is also not allowed.

  During nebulization, the device will automatically enable the emergency ventilation in case of hazardous conditions such as the air temperature is too high, the oxygen concentration is too low, or the CO_2 concentration is too high.
- The remaining nebulized drug will affect the ambient air.
- After nebulization, open the cabin door and keep still for half an hour.

NOTE

- Refer to the nebulizer accompanying directions for use to install and use the nebulizer.
- Only use medications approved for nebulization.

To connect the nebulizer

Perform the following procedure:

1. Install one end of the airway tube to the nebulizer connector of the device and the other end to the nebulizer cup.

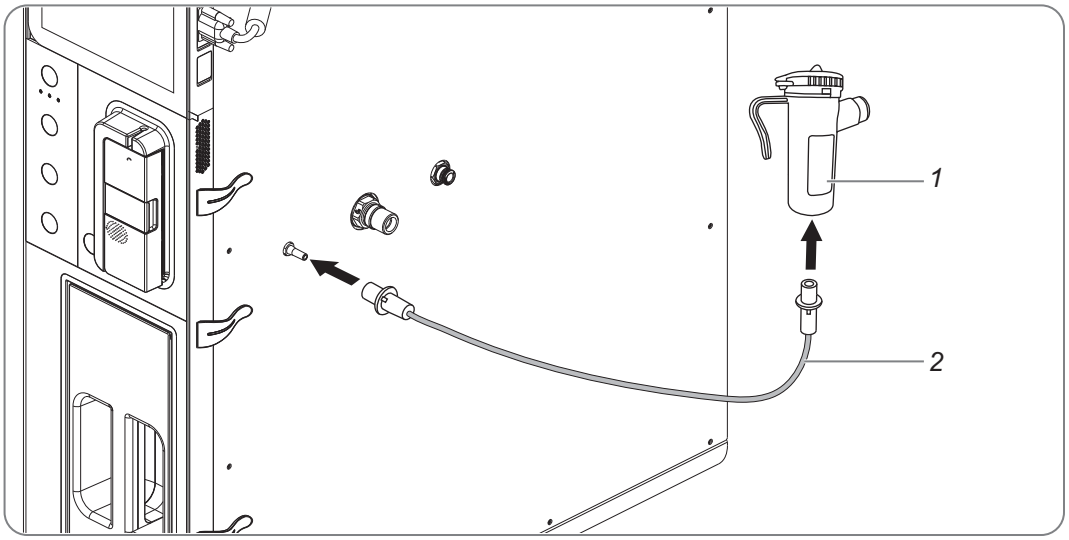

1.	Nebulizer cup
2.	Airway tube

2. Select an appropriate multi-function operation hole, and then open the hole cover.

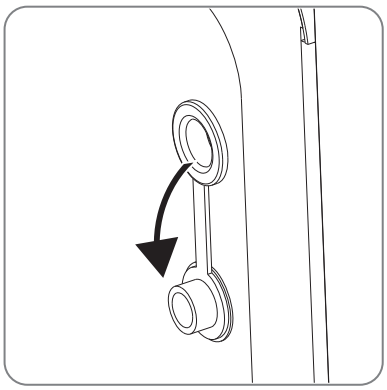

3. Install the nebulizer cup into the multi-function operation hole as shown.

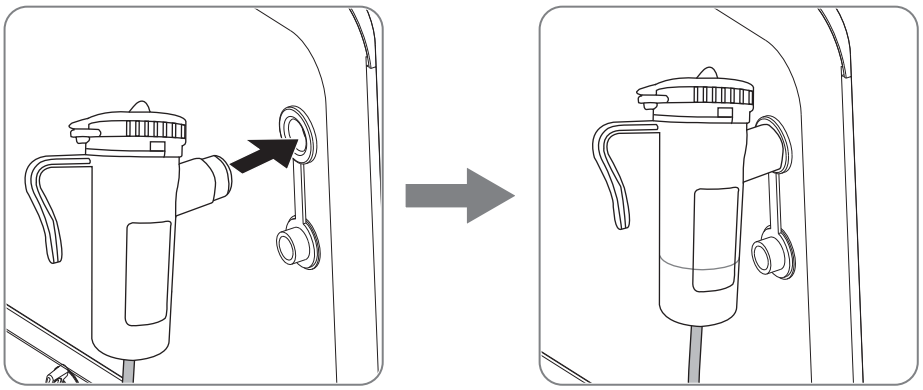

To enable the nebulization

Perform the following procedure:

1. On the main screen, tap the environment information area to enter the **Environment** details interface.

2. Tap **Nebulization** icon to enter the **Nebulization Setup** dialog.

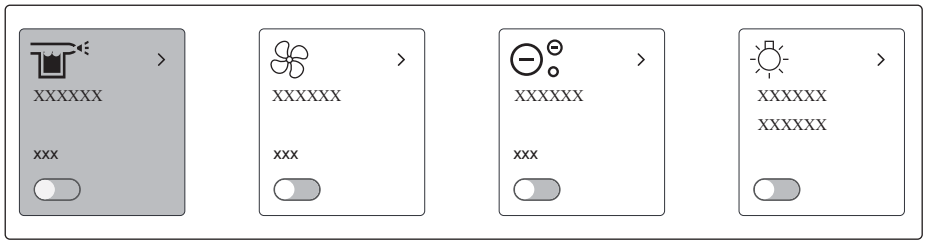

3. Set the target value and tap **OK**.
4. Switch to to enable the nebulization function.

8.5.2 Ventilation

WARNING

To ensure safety and avoid excessive oxygen consumption, the device will suspend air temperature, humidity, oxygen concentration and CO_2 concentration controls and nebulization when the ventilation function is enabled.

Perform the following procedure:

1. On the main screen, tap the environment information area to enter the **Environment** details interface.
2. Tap **Ventilation** icon to enter the **Ventilation Setup** dialog.

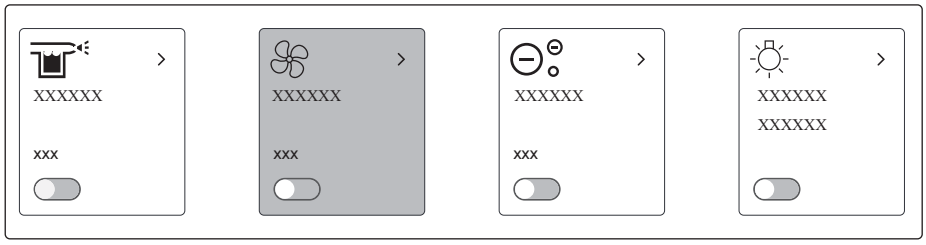

3. Set the target value and tap **OK**.
4. Switch to to enable the ventilation function.

You can also quickly enable the ventilation function by pressing the button on the control panel.

8.5.3 Anion

WARNING

To ensure safety, when oxygen supply is enabled or the oxygen concentration is too high, the device will disable the anion function. The anion function is allowed only when the oxygen concentration inside the device is lower than 23%.

Perform the following procedure:

1. On the main screen, tap the environment information area to enter the **Environment** details interface.
2. Tap **Anion** icon to enter the **Anion Setup** dialog.

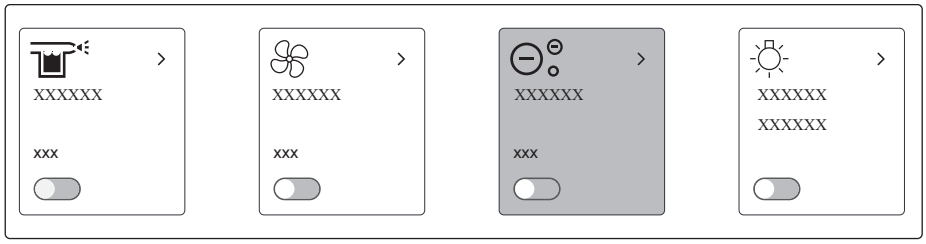

3. Set the target value and tap **OK**.
4. Switch to to enable the anion function.

8.5.4 Light

Perform the following procedure:

1. On the main screen, tap the environment information area to enter the **Environment** details interface.
2. Tap **Light** icon to enter the **Light Setup** dialog.

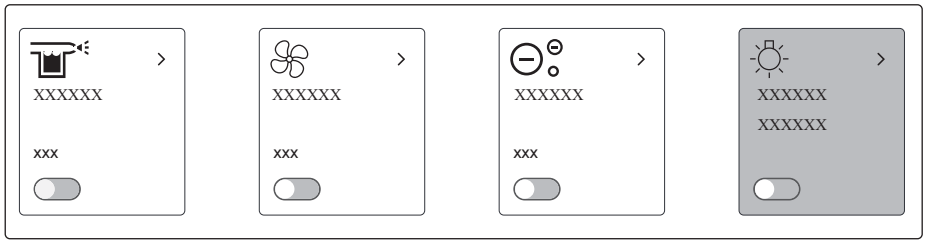

3. Set the light mode as required, and tap **OK**.

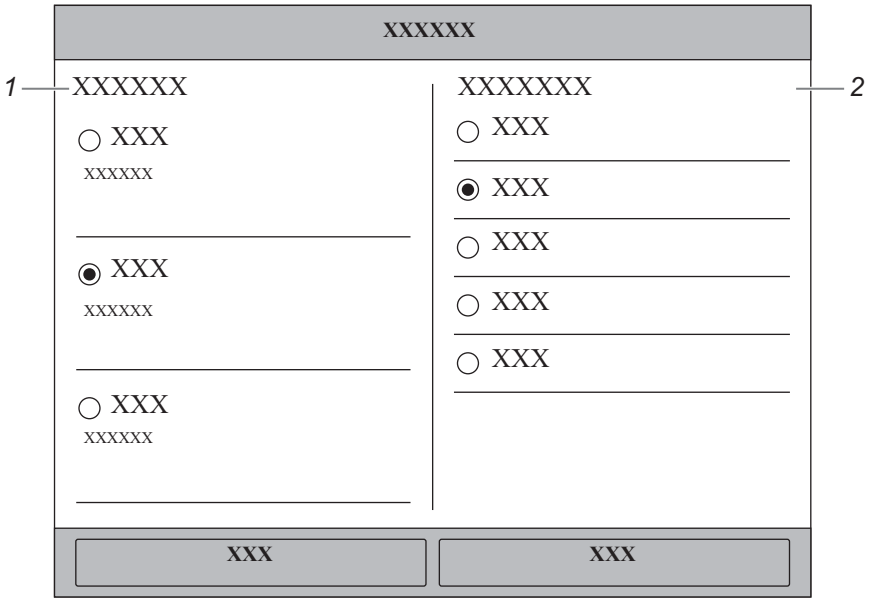

1.	Select an appropriate light mode according to the animal condition
2.	Adjust the light brightness level when **White Light** is enabled

4. Switch to to enable the light function.

9 Monitoring ECG

9.1 Overview

The electrocardiogram (ECG) measures and records the electrical activity of the heart.

WARNING

- This device is not intended for direct cardiac application.
- Make sure the conductive parts of electrodes and associated connectors, including the neutral electrode, do not contact any other conductive parts including earth.
- Use defibrillation-proof ECG cables during defibrillation.
- Do not touch the animal or metal devices connected to the animal during defibrillation.
- To reduce the hazard of burns during high-frequency surgical procedure, ensure that the device's cables and transducers never come into contact with the electrosurgery unit (ESU).
- To reduce the hazard of burns during use of high-frequency surgical unit (ESU), the ECG electrodes should not be located between the surgical site and the ESU return electrode.
- Never entangle the ESU cable and the ECG cable together.
- If the ESU is used, do not place ECG electrodes near the grounding plate of the ESU. Otherwise, interference on ECG signals may occur.
- Make sure the device connection and animal information are correct before monitoring ECG.
- Keep close observation on the device connection status during animal monitoring, in case animal data loss or errors occur.

CAUTION

- Only use parts and accessories specified in this manual. Follow the instructions for use and adhere to all warnings and cautions.
- Periodically inspect the electrode application site to ensure skin integrity. If the skin quality changes, replace the electrodes or change the application site.
- Interference from ungrounded instrument near the animal and electrosurgery interference can induce noise and artifact into the waveforms.
- The animal should be placed in a specified area. If the animal is at the edge of or outside the network coverage range, unstable network connection may compromise the monitoring performance.

- Make sure the SpO_2 module screen and touch button are not damaged or broken. If there is any sign of damage, remove it from use and contact the Customer Service Department or your local distributor.
- Check the metal parts like contacts and pins on the SpO_2 module, accessories and charging station before use or on a regular basis. If needed, clean them with a soft cloth moistened with water or ethanol. Otherwise, the performance might be degraded because of poor contact.
- If the SpO_2 module screen is loose, remove it from use and contact the Customer Service Department or your local distributor.

NOTE

- Store the electrodes at room temperature.
- Immediately use the electrode after open the its package.
- Never mix animal electrode types or brands. This may lead to problem due to impedance mismatch.
- When applying the electrodes, avoid bony area, obvious layers of fat, and major muscles. Muscle movement can result in electrical interference. Applying electrodes on major muscles, for example on muscles of the thorax, may lead to erroneous arrhythmia alarms due to excessive muscle movement.

9.2 Starting the ECG Monitoring

Perform the following procedure:

1. Wear the Vet Harness for ICU.

For details, see its accompanying manual.

2. Prepare the animal’s skin:

Proper skin preparation is necessary for good signal quality at the electrode, as the skin is a poor conductor of electricity. To properly prepare the skin, choose flat areas and then follow this procedure:

1. Shave hair from skin at chosen sites.
2. Gently rub skin surface at sites to remove dead skin cells.
3. Thoroughly cleanse the site. It is not recommend using ether or pure alcohol, because this dries the skin and increases the resistance.
4. Dry the skin completely before applying the electrodes.

3. Attach the clips or snaps to the electrodes before placing them.

Check that electrode packages are intact and the electrodes are not past the expiry date. Make sure the electrode gel is moist. Attach the snaps to the electrodes before placing electrodes on the animal.

4. Place the electrodes on the prepared sites.

Exhaust all air between the electrode pads and the animal's skin.

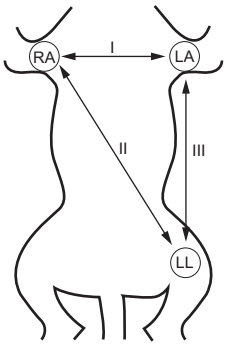

- RA placement: on the right foreleg.
- LA placement: on the left foreleg.
- LL placement: on the left hind leg.

5. Install the ECG module into the connector of the ECG module docking.
6. Clamp the ECG module docking to the harness.
7. Adjust parameters in the **ECG** menu to obtain the optimized waveform display.

9.3 Results Display

The measurement results are displayed on the main screen and the **Monitoring** details interface.

The ECG numeric area and waveform area are configured to be different for different lead type and ECG settings.

Figure 9-1 ECG results on the main screen

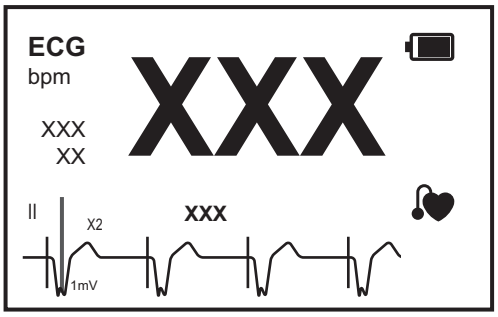

Figure 9-2 ECG results on the monitoring details interface

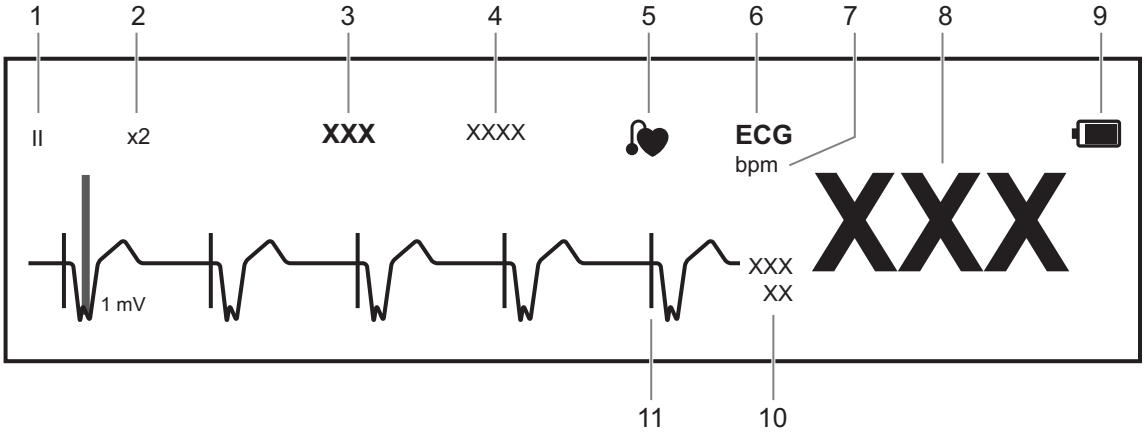

1.	ECG lead label of the displayed waveform
2.	ECG waveform gain
3.	ECG filter mode
4.	ECG Location
5.	Paced status • When **Paced** is set to **Yes**: • When **Paced** is set to **No**:
6.	Parameter label
7.	HR Unit
8.	HR value
9.	Battery capacity of ECG module
10.	HR alarm limits
11.	Paced status When **Paced** is set to **Yes**, the pace pulse markers are displayed corresponding to detected pace pulse on each ECG waveform.

9.4 Parameter Adjustment

Enter the **Monitoring** details interface, tap the **ECG** numeric area or waveform area to open the **ECG** menu.

Setting ECG Alarm Properties

Perform the following procedure:

1. Select the **Alarm** tab.
2. Set alarm properties as desired.

Input the password if required.

Changing ECG Wave Settings

Perform the following procedure:

1. Select the **Setup** tab.
2. Adjust parameters as required:

Item	Description
ECG	Set the leads of displayed ECG waveforms, **TIP** Ensure that you have selected the optimal leads with the best waveform amplitude and the highest signal-to-noise ratio. Selecting the optimal leads is important for detecting beats, classifying beats, and detecting ventricular fibrillation.
Speed	Change ECG waveform speed.
Filter	Set the ECG waveform filter mode. • **Monitor**: use under normal measurement conditions. • **Surgery**: use when the signal is distorted by high frequency or low frequency interference. High frequency interference usually results in large amplitude spikes making the ECG signal look irregular. Low frequency interference usually leads to wandering or rough baseline. The surgery filter reduces artifacts and interference from electrosurgical units. Under normal measurement conditions, selecting **Surgery** may suppress certain features or details of the QRS complexes. • **ST**: recommended for ST monitoring.
Notch Filter	Notch Filter is always **On**. The notch filter removes the line frequency interference.
Lead Set	Set according to the lead type you are going to use.
Measurement Site	Set the desired ECG measurement site.
CrozFusion	Enable/disable **CrozFusion** function.
ECG Gain	Set to change the ECG waveform size by adjusting the ECG gain.
Display CrozFusion	The ECG SQI, Pleth SQI, and signal fusion status are displayed when the **CrozFusion** function is enabled.
QRS Volume	Adjust the QRS volume.

Adjusting the Minimum QRS Detection Threshold

To avoid false asystole alarm due to low R wave amplitude, and to avoid tall T waves and P waves being mistaken for QRS complexes, the device provides a means to manually adjust the minimum QRS detection threshold.

CAUTION

- The setting of the QRS detection threshold can affect the sensitivity for arrhythmia, ST, QT/QTc detection, and heart rate calculation.

- If QRS amplitude is low, the device might not be able to calculate heart rate and false asystole calls may occur.

NOTE

The minimum QRS detection threshold can only be adjusted when the ECG filter is set to **Monitor**.

Perform the following procedure:

1. Select the **Setup** tab, and set **Filter** to **Monitor**.
2. Select the **QRS Threshold** tab.
3. Select / to adjust the minimum threshold for QRS detection.

   Select **Defaults** to reset the QRS threshold to the default value (0.16 mV).

9.5 Monitoring Arrhythmia

9.5.1 Safety Information

WARNING

- Heart rate reading may be affected by cardiac arrhythmias. Do not rely entirely on heart rate alarms when monitoring animals with arrhythmia. Always keep these animals under close surveillance.
- The arrhythmia function may detect an incorrect arrhythmia. Therefore, physicians must combine more clinical signs to analyze arrhythmia information.

CAUTION

- The arrhythmia analysis program may incorrectly identify the presence or absence of an arrhythmia. Therefore, a physician must analyze the arrhythmia information with other clinical findings.
- The ECG waveform amplitude and QRS threshold settings will affect the sensitivity of arrhythmia detection and heart rate calculation.
- If the QRS amplitude is too low, the device may not be able to calculate the heart rate or detect an incorrect asystole.
- During the learning phase of the algorithm, arrhythmia detection may not be available. To allow the algorithm to reach optimal detection performance, you should closely device animal condition during learning phase and for several minutes after the learning phase.

9.5.2 Arrhythmia Events

This section lists all arrhythmia events and their criteria.

Lethal Arrhythmia Events

Arrhythmia messages	Description
Asystole	No QRS complex detected within the set time interval in the absence of ventricular fibrillation or chaotic signal.
V-Fib/V-Tach	A fibrillatory wave for 6 consecutive seconds. A dominant rhythm of adjacent PVCs and the ventricular rate is greater than the V-tach rate limit.
V-Tach	The number of consecutive PVCs is greater than or equal to the V-Tach PVCs limit, and the ventricular rate is greater than or equal to the V-Tach rate limit.
Vent Brady	The number of consecutive PVCs is greater than or equal to V brady PVC limit and the ventricular rate is less than the V brady rate limit.
Extreme Tachy	The heart rate is greater than the extreme tachycardia limit.
Extreme Brady	The heart rate is less than the extreme bradycardia limit.

Nonlethal Arrhythmia Events

Arrhythmia messages	Description
R on T	R on T PVC is detected.
Run PVCs	More than two consecutive PVCs, but lower than the V brady PVCs limit, and the ventricular rate is lower than the V-Tach rate limit.
Couplet	A Pair of PVCs detected in between normal beats.
Multiform PVC	Multiform PVCs detected in Multif. PVC's Window (which is adjustable).
PVC	One PVC detected in between normal beats.
Bigeminy*	A dominant rhythm of N, V, N, V, N, V.
Trigeminy*	A dominant rhythm of N, N, V, N, N, V, N, N, V.
Tachy	The heart rate is greater than the tachycardia limit.
Brady	The heart rate is lower than the bradycardia limit.
Pacer Not Capture	No QRS complex detected for 300 ms following a pace pulse (for paced animals only).
Pacer Not Pacing	No pace pulse detected for 1.75 x average R-to-R intervals following a QRS complex (for paced animals only).
Missed Beat	At least 3 consecutive Ns, and The current RR interval is greater than 1.5 x previous RR interval, and The next RR interval is lower than 1.5 x average RR interval, and HR lower than 100 and the current RR interval is greater than 1.75 x average RR interval, or HR is greater than or equal to 100 and the current RR interval is greater than 1000 ms.
Nonsus V-Tach	The number of consecutive PVCs is lower than the V-Tach PVCs limit but greater than 2, and the ventricular rate is greater than or equal to the V-Tach Rate limit.
Vent Rhythm	The number of consecutive PVCs is greater than or equal to the V Brady PVCs limit, and ventricular rate is greater than or equal to the V Brady Rate limit but lower than V-Tach Rate limit.

Arrhythmia messages	Description
Pause	No QRS complex is detected within the set time threshold of pause.
Irr Rhythm	Consistently irregular rhythm (N, irregular RR interval change is greater than 12.5%)
PVCs/min High	PVCs/min exceeds high limit.
Pauses/min High	Pauses/min exceeds high limit.
SVT	The number of consecutive SVCs is greater than or equal to the SVT SVCs limit, and the supraventricular HR is greater than or equal to the SVT HR limit.
SVCs/min High	SVCs/min exceeds the high limit.

TIP

N: normal beat; V: ventricular beat

9.5.3 Displaying Arrhythmia Information

The arrhythmia information displays in the numeric area.

Perform the following procedure:

1. On the main screen, tap the monitoring information area to enter the **Monitoring** details interface.
2. Do one of the following to open the **Tile Layout** menu:
   - Select **More** > **Screen Setup** > **Monitor** > **Tile Layout**.
   - Select **Monitoring Setup** > **Screen Setup** > **Tile Layout**.
3. Tap the numeric area where you want to display the arrhythmia information, and then select **ECG** > **Arrhythmia**.

9.5.4 Changing Arrhythmia Settings

Perform the following procedure:

1. On the main screen, tap the monitoring information area to enter the **Monitoring** details interface.
2. Tap the ECG parameter area or waveform to open the **ECG** menu.
3. Select **Arrhythmia** > **Alarm**.
4. Input the password if required.
5. Set alarm properties as desired.

NOTE

- Switch off lethal arrhythmia alarms only when the **Lethal Arrhy Alarms Off** is set to **Enable**.
- The priority of lethal arrhythmia alarms is always high. It cannot be altered.

9.5.5 Setting the Lethal Arrhythmia Alarms Switch

You can choose whether switching off lethal arrhythmia alarms is permissible or not. This function is password protected.

WARNING

If you switch off all arrhythmia alarms, the device will not alarm for any arrhythmia event. This may result in a hazard to the animal. Always keep the animal under close surveillance.

NOTE

If any of the lethal arrhythmia alarms is switched off, the ECG waveform area displays the **Lethal Arrhys Off** message.

Changing Arrhythmia Alarm Threshold Settings

You can change threshold settings for some arrhythmia alarms. When an arrhythmia violates its threshold, an alarm will be triggered.

Perform the following procedure:

1. On the main screen, tap the monitoring information area to enter the **Monitoring** details interface.
2. Tap the ECG parameter area or waveform to open the **ECG** menu.
3. Select **Arrhythmia** > **Threshold**.
4. Input the password if required.
5. Set the threshold of desired arrhythmia alarms.

NOTE

The **Asystole Delay** relates to ECG relearning. When heart rate is less than 30 bpm, it is recommended to set **Asystole Delay** to 10s.

Arrhythmia Threshold Range

Arrhythmia	Threshold Range
PVCs/min	1 to 100
Asystole Delay	3S to 10s
Tachy(HR High)	60 bpm to 295 bpm
Brady(HR Low)	16 bpm to 120 bpm
Extreme Tachy	65 bpm to 300 bpm
Extreme Brady	15 bpm to 115 bpm

Arrhythmia	Threshold Range
Multif PVCs Window	3 beats to 31 beats
V-Tach Rate	100 bpm to 200 bpm
V-Tach PVCs	3 beats to 99 beats
Pause Threshold	1.5s, 2.0s, 2.5s, 3.0s
V-Brady PVCs	3 beats to 99 beats
V-Brady Rate	15 bpm to 60 bpm
Pauses/min	1 to 15
SVT SVCs	3 beats to 99 beats
SVT HR	100 bpm to 300 bpm
SVCs/min	1 beat to 100 beats
Refractory Period 1	**Off**, **30 sec**, **1 min**, **2 min**, **3 min**, **4 min**, **5 min**
Refractory Period 2	**Off**, **30 sec**, **1 min**, **2 min**, **3 min**, **4 min**, **5 min**, **10 min**, **15 min**

Setting Thresholds for PVC-Related Alarms

PVC-related alarms are detected on the basis of the current PVC rate and the number of consecutive PVCs.

Perform the following procedure:

1. On the main screen, tap the monitoring information area to enter the **Monitoring** details interface.
2. Tap the ECG parameter area or waveform to open the **ECG** menu.
3. Select **Arrhythmia** > **More Threshold**.
4. Input the password if required.
5. Adjust **V-Tach PVCs**, **V-Tach Rate**, **V-Brady PVCs**, **V-Brady Rate** to set the threshold of desired PVC-related alarms.

   The following figure illustrates the conditions under which PVC alarms will be generated if **V-Tach PVCs** is set to 3, **V-Tach Rate** is set to 160, **V-Brady PVCs** is set to 5, and **V-Brady Rate** is set to 40.

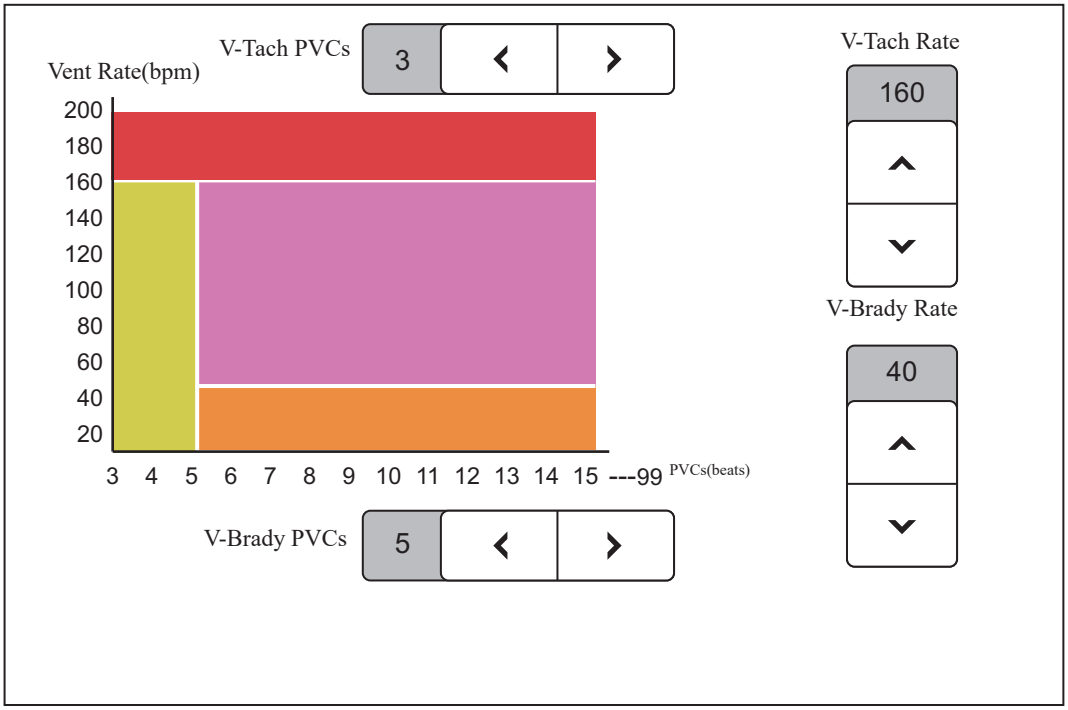

- If the number of consecutive PVCs is greater than or equal to the V-Tach PVCs limit (3), and the ventricular rate (Vent Rate) is greater than or equal to the V-Tach Rate limit (160), a V-Tach alarm is generated.
- If the number of consecutive PVCs is lower than the V-Tach PVCs limit (3) but greater than 2, and the ventricular rate is greater than or equal to the V-Tach Rate limit (160), a Nonsus V-Tach alarm is generated.
- If the number of consecutive PVCs is greater than or equal to the V-Brady PVCs limit (5), and the ventricular rate is lower than the V-Tach Rate limit (160) but greater than or equal to the V Brady Rate limit (40), a Vent Rhythm alarm is generated.
- If the number of consecutive PVCs is lower than the V-Brady PVCs limit (5) but greater than 2, and the ventricular rate is lower than the V-Tach Rate limit (160), a Run PVCs alarm is generated.
- If the number of consecutive PVCs is greater than or equal to the V-Brady PVCs limit (5), and the ventricular rate is lower than the V Brady Rate limit (40), a Vent Brady alarm is generated.

9.5.6 Arrhythmia Alarms Timeout

Normally, an arrhythmia alarm is presented when an alarm condition is detected. However, there are certain situations that can inhibit audible and visible alarm indications even though an alarm condition was detected.

Arrhythmia Alarm Chains

If multiple arrhythmia conditions occur simultaneously, announcing all detected alarm conditions may be confusing. This may result in serious conditions being overlooked. So arrhythmia alarms are prioritized through alarm chains.

There are 5 arrhythmia alarm chains: one high priority chain and four medium priority chains, including PVC chain, beats detection chain, and supraventricular chain.

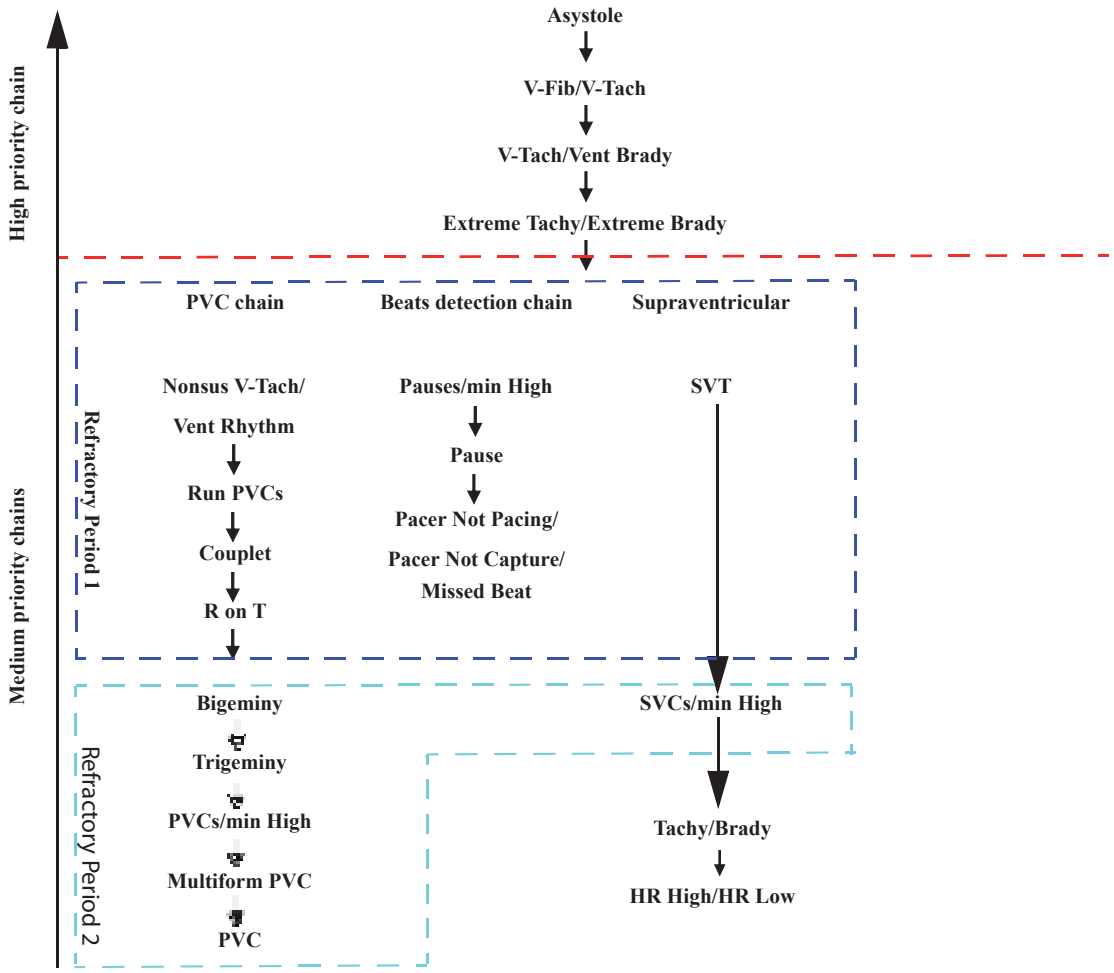

The refractory periods have no impact on **Tachy**, **Brady**, **HR High**, and **HR Low**.

Setting Arrhythmia Alarm Shielding Period

The arrhythmia algorithm can disable alarm light and alarm tone for designated period of time when certain arrhythmia alarms are detected.

This function is password protected.

NOTE

- The arrhythmia shielding period is only applicable to arrhythmias in the medium priority chains. For arrhythmias in the high priority chain, alarm tone and alarm light are generated as soon as an alarm condition is detected.
- The arrhythmia shielding period has no impact on **HR High**, **HR Low**, **Tachy**, **Brady**, and **Irr Rhythm End**.

Arrhythmia Alarm Shielding Rules

The following table explains how audible and visual alarm indicate during arrhythmia alarm shielding period.

Previous alarm	Current alarm	Alarm indication
Alarm in high priority chain	Alarm in high priority chain	Alarm light and alarm tone
	Alarm in medium priority chain	During the shielding period, alarm light and alarm tone are disabled. When the shielding period is reached, alarm light and alarm tone are reactivated.
Alarm in medium priority chain	Alarm in high priority chain	Alarm light and alarm tone
	Alarm in the same medium priority chain, but with higher priority	Alarm light and alarm tone
	The same alarm reoccurs	During the shielding period, alarm light and alarm tone are disabled. When the shielding period is reached, alarm light and alarm tone are reactivated.
	Alarm in the same medium priority chain, but with lower priority	During the shielding period, alarm light and alarm tone are disabled. When the shielding period is reached, alarm light and alarm tone are reactivated.
	Alarm in other medium priority chain	Alarm light and alarm tone

Setting Arrhythmia Refractory Periods

For some arrhythmias in the medium priority chain, an arrhythmia and arrhythmias with lower priority in the same alarm chain can be deactivated in a designated period of time. This period is called refractory period. When an arrhythmia is detected, the refractory period automatically starts. During the refractory period, the same alarm condition does not trigger an alarm. If the condition of an arrhythmia with lower priority in the same alarm chain appears, the device does not generate an alarm either.

Perform the following procedure:

1. On the main screen, tap the monitoring information area to enter the **Monitoring** details interface.
2. Tap the ECG parameter area or waveform to open the **ECG** menu.
3. Select **Arrhythmia** > **Threshold**.
4. Set **Refractory Period 1** and **Refractory Period 2**.

The default value of **Refractory Period 1** is 3 minutes; the default value of **Refractory Period 2** is 10 minutes. To disable a refractory period, set it to **Off**.

NOTE

- Refractory periods are only applicable to arrhythmias in the medium priority chains.
- The refractory periods have no impact on **Tachy**, **Brady**, **HR Low**, and **Irr Rhythm End**.

9.6 ST Segment Monitoring

The ST segment of the ECG waveform refers to the period from the end of ventricular depolarization to the beginning of ventricular repolarization, or from the end of the QRS complex (point J) to the beginning of the T wave. ST segment analysis is commonly used to device an animal's oxygen supply and myocardial viability.

9.6.1 Safety Information

WARNING

- ST values may be affected by such factors as some drugs or metabolic and conduction disturbances.
- ST deviation is often calculated at a fixed offset from the J point. Changes in heart rate may affect ST.
- The significance of the ST segment changes must be decided by the physician.
- This device provides ST segment change information, and the clinical opinion on the information should be decided by the physician.

9.6.2 Enabling ST Monitoring

TIP

ST Analysis is set to Off by default.

Perform the following procedure:

1. On the main screen, tap the monitoring information area to enter the **Monitoring** details interface.
2. Tap the ECG parameter area or waveform to open the **ECG** menu.
3. Select **ST** > **Setup**.
4. Switch to to enable **ST Analysis**.

ST analysis may not be reliable under the following situations:

- All ECG leads are noisy.
- Arrhythmias such as atrial fibrillation or flutter occur, which may cause irregular baseline.
- The animal is implanted with a ventricular pacemaker.
- The animal has left bundle branch block.

Consider switching off ST analysis in these cases.

9.6.3 Displaying ST Numerics

To display ST numerics and Segments, follow this procedure:

1. On the main screen, tap the monitoring information area to enter the **Monitoring** details interface.
2. Do one of the following to open the **Tile Layout** menu:

- Select **More** > **Screen Setup** > **Monitor** > **Tile Layout**.
- Select **Monitoring Setup** > **Screen Setup** > **Tile Layout**.

3. Tap the waveform area where you want to display the ST segments, and then select **ECG** > **ST**.

9.6.4 Displaying the ST segment in the waveform area

Perform the following procedure:

1. On the main screen, tap the monitoring information area to enter the **Monitoring** details interface.
2. Do one of the following to open the **Tile Layout** menu:
   - Select **More** > **Screen Setup** > **Monitor** > **Tile Layout**.
   - Select **Monitoring Setup** > **Screen Setup** > **Tile Layout**.
3. Tap the numeric area where you want to display the ST numerics, and select **ECG** > **ST Segment**.

   The waveform area displays the current and baseline ST segments. It also displays the current and baseline ST values. In the following picture, the current ST segment and value are in green, while the baseline ST segment and value are in white.

9.6.5 Entering the ST View

The ST View shows a complete QRS segment for each ST lead. The ST View shows a complete QRS segment for each ST lead. The color of current ST segments and ST values is consistent with the color of ECG waveforms, normally green. The color of baseline ST segments and ST values is white.

You can enter the **ST View** either by selecting the **ST View** in the waveform area or by the following ways:

1. On the main screen, tap the monitoring information area to enter the **Monitoring** details interface.
2. Tap the ECG parameter area or waveform to open the **ECG** menu.
3. Tap **ST** tab.
4. Tap **ST View**.

9.6.6 Saving the Current ST as Baseline

ST deviation is typically monitored as a relative change from a baseline value. Set an ST baseline when ST values become stable. If you did not set the ST baseline, the device automatically saves the baseline when valid ST values appear for 5 minutes. You can also update the baseline manually by selecting **Set Baseline** on the lower-left corner of the **ST View** menu.

From the ST View window, you can also perform the following operations:

- Display or hide ST baseline by selecting **Display Baseline** or **Hide Baseline**.
- Display or hide the position of ISO point, J point and ST point by selecting **Display Marker** or **Hide Marker**.

CAUTION

Updating ST baseline affects ST alarms.

9.6.7 Entering the ST Graphic Window

Perform the following procedure:

1. On the main screen, tap the monitoring information area to enter the **Monitoring** details interface.
2. Tap the ECG parameter area or waveform to open the **ECG** menu.
3. Tap **ST** tab.
4. Tap **ST Graphic**.
   - When **ST Alarm Mode** is set to **Absolute**: the height of the bar indicates the ST value of corresponding ST lead. The color of the bar indicates ST alarm status: green indicates that corresponding ST value is within alarm limits; yellow and red indicate that the ST value exceeds the alarm limits. The color matches ST alarm priority.
   - When **ST Alarm Mode** is set to **Relative**: the height of grey bar indicates the baseline ST value and the green bar (yellow or red if an alarm occurs) indicates ΔST.

9.6.8 Changing ST Settings

Setting ST Alarm Properties

To set ST alarm properties, follow this procedure:

1. On the main screen, tap the monitoring information area to enter the **Monitoring** details interface.
2. Tap the ECG parameter area or waveform to open the **ECG** menu.
3. Select **ST** > **Alarm**.
4. Set **ST Alarm Mode** to **Absolute** or **Relative**.
   - **Absolute**: separately set the alarm properties for each ST alarm.
   - **Relative**: set the alarm properties for **ST Single** and **ST Dual** alarms.
5. Set the ST alarm properties as required.

Changing Leads for ST Display

The device automatically selects the three most deviated leads for ST display. You can also manually select the leads.

Perform the following procedure:

1. On the main screen, tap the monitoring information area to enter the **Monitoring** details interface.
2. Tap the ECG parameter area or waveform to open the **ECG** menu.
3. Select **ST** > **Setup**.
4. Tap **ST Segment** to set the lead to be displayed.

You can select up to 3 leads.

Showing ISO Point, J Point, and ST Point Marks

TIP

In the waveform area, the ISO point, J point, and ST point mark do not display on the ST segments by default.

Perform the following procedure:

1. On the main screen, tap the monitoring information area to enter the **Monitoring** details interface.
2. Tap the ECG parameter area or waveform to open the **ECG** menu.
3. Select **ST** > **Setup**.
4. Switch on **Show Markers**.

9.6.9 Adjusting ST Measurement Points

About ST Point, ISO Point, and J Point

The ST deviation value for each beat is the potential difference between the isoelectric (ISO) point and the ST point. The ISO point provides the baseline. The ST point is at the midpoint of the ST segment. The J point is the end of the QRS complex. As the J point is a fixed distance away from the ST point, it can be useful to help you correctly position the ST point.

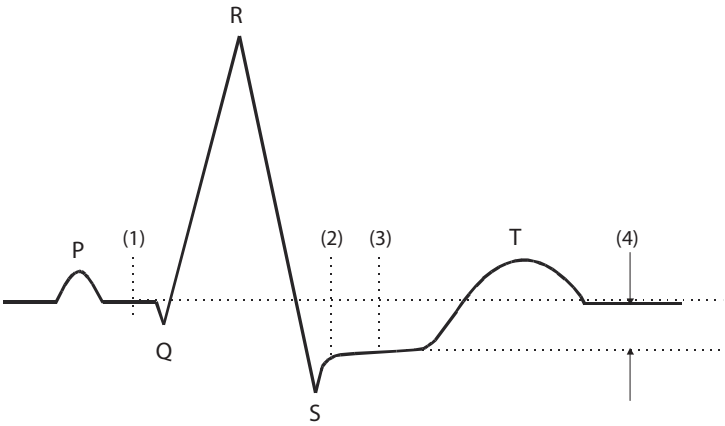

1.	ISO Point
2.	J Point
3.	ST Point
4.	ST value

Setting ST Point, ISO Point, and J Point

CAUTION

- You need to adjust the ST points before starting monitoring, or if the animal's heart rate or ECG morphology changes significantly, as this may affect the size of the QT interval and thus the placement of the ST point. Artificial ST segment depression or elevation may occur if the isoelectric point or the ST point is incorrectly set.
- Always make sure that the positions of ST points are appropriate for your animal.

Perform the following procedure:

1. On the main screen, tap the monitoring information area to enter the **Monitoring** details interface.
2. Tap the ECG parameter area or waveform to open the **ECG** menu.
3. Select **ST** > **Adjust**.
4. Tap **ST Point** to set ST point location.

The setting of **Auto Adjust** defines the method of adjusting the ISO point and J point. **Auto Adjust** is enabled by default. In this case, positions of ISO point and J point are automatically adjusted accordingly. If **Auto Adjust** is disabled, you need to manually adjust the position of ISO point and J point by selecting the arrows at the right sides of **ISO** and **J**.

- The ISO point (isoelectric) position is given relative to the R-wave peak. Position the ISO point in the middle of the flattest part of the baseline (between the P and Q waves).
- The J point position is given relative to the R-wave peak and helps locating the ST point. Position the J point at the end of the QRS complex and the beginning of the ST segment.
- The ST point is positioned a fixed distance from the J point. Move the J point to position the ST point at the midpoint of the ST segment. Position the ST point relative to the J point at **J+60/80 msec**, **J+40 msec**, **J+60 msec** or **J+80 msec**.

  When **J+60/80 msec** is selected, the device automatically adjusts the position of the ST point according to the heart rate:
  - When the heart rate is greater than 120 bpm, the device will use **J+60/80 msec** to determine the location of the ST point.
  - When the heart rate is smaller than or equal to 120 bpm, the device will use **J+80 msec** to determine the location of the ST point.

9.7 QT/QTc Interval Monitoring

The QT interval is defined as the time between the beginning of the Q-wave and the end of the T-wave. It measures the total duration of ventricular depolarization (QRS duration) and repolarization (ST-T). QT interval monitoring can assist in the detection of long QT syndrome.

The QT interval has an inverse relationship to heart rate. Faster heart rates shorten the QT interval and slower heart rates prolong the QT interval. Therefore, several formulas can be used to correct the QT interval for heart rate. The heart rate corrected QT interval is abbreviated as QTc.

9.7.1 QT/QTc Monitoring Limitations

Some conditions may make it difficult to achieve reliable QT/QTc monitoring, for example:

- R-wave amplitudes are too low
- The presence of frequent ventricular ectopic beats
- Unstable RR intervals
- P-waves tending to encroach on the end of the previous T-wave at high heart rates
- The T-wave is very flat or T-wave are not well defined
- The end of the T-wave is difficult to delineate because of the presence of U-waves
- QTc measurements are not stable
- In the presence of noise, asystole, ventricular fibrillation, and ECG lead off

For these cases you should select a lead with good T-wave amplitude and no visible flutter activity, and without a predominant U-wave or P-wave.

Some conditions such as left or right bundle branch block or hypertrophy can lead to a widened QRS complex. If a long QTc is observed you should verify it to ensure that it is not caused by QRS widening.

Because normal beats followed by ventricular beats are not included in the analysis, no QT measurement will be generated in the presence of a bigeminy rhythm.

If the heart rate is extremely high, QT will not be measured. When the heart rate changes, it can take several minutes for the QT interval to stabilize. For reliable QTc calculation, it is important to avoid measurements when the heart rate is changing.

9.7.2 Enabling QT/QTc Monitoring

The QT monitoring function is disabled by default. Before you start QT monitoring, enable the QT function.

Perform the following procedure:

1. On the main screen, tap the monitoring information area to enter the **Monitoring** details interface.
2. Tap the ECG parameter area or waveform to open the **ECG** menu.
3. Select **QT** > **Setup**.
4. Switch to to enable **QT Analysis**.

9.7.3 Displaying QT/QTc Numerics and Segments

To display QT/QTc numerics and Segments, follow this procedure:

1. On the main screen, tap the monitoring information area to enter the **Monitoring** details interface.
2. Do one of the following to open the **Tile Layout** menu:
   - Select **More** > **Screen Setup** > **Monitor** > **Tile Layout**.
   - Select **Monitoring Setup** > **Screen Setup** > **Tile Layout**.
3. Tap the parameter numeric area where you want to display the QT numerics, and then select **ECG** > **QT/QTc**.

NOTE

QTc values are calculated based on the QT-HR, not the ECG HR.

The display of the QT numeric area differs as related settings change.

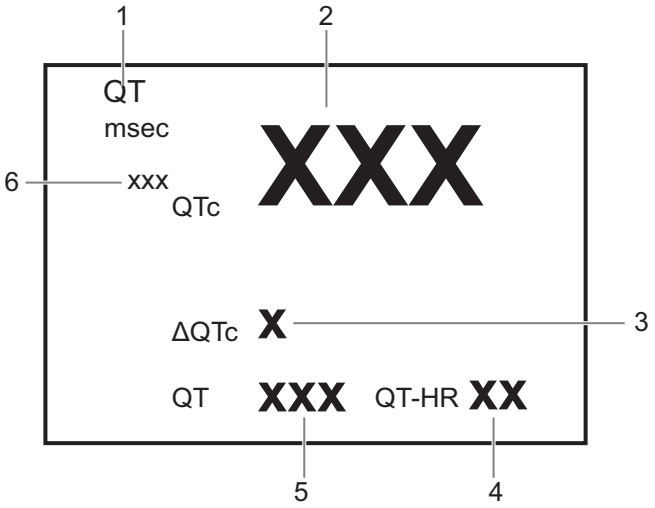

1.	Parameter label
2.	QTc value
3.	ΔQTc value **TIP** The difference between the current and baseline QTc values. If the QTc value is alarm off, the alarm off icon is displayed on the right of this value.
4.	QT-HR value
5.	QT value
6.	QTc alarm limit **TIP** If QTc alarm is off, the alarm off symbol is displayed.

9.7.4 Entering the QT View

QT View shows the current and baseline QT parameter values and waveforms.

Perform the following procedure:

1. On the main screen, tap the monitoring information area to enter the **Monitoring** details interface.
2. Select the QT numerics area, ECG numeric area, or waveform area to open the **QT** menu.
3. Tap **QT View**.

   - The current waveform is shown in the upper half in green.

- The baseline waveform is shown below in white.
- The start of QRS complex and the end of the T wave are marked with a vertical line.
- In some conditions, no QT measurement can be calculated. Then the cause of failed QT measurement is shown at the bottom of the QT numerics area and the message **Cannot Analyze QT** is shown in the technical alarm area.

Select the left or right arrow to switch leads. Corresponding waveform will be highlighted.

9.7.5 Saving the Current QTc as Baseline

CAUTION

Updating QTc baseline affects ΔQTc value and alarm.

In order to quantify differences in the QTc value, you can set a QTc baseline. If you do not set a baseline within the first 5 minutes after getting valid QT values, the device will automatically set a baseline for this animal.

Perform the following procedure:

1. Select **QT** > **QT View**, and then select **Set Baseline**.
2. From the pop-up dialog box, select **OK**.

   This baseline will then be used to calculate ΔQTc.

   After a new QT baseline is set, the old baseline will be discarded. The baseline will be cleared upon animal discharge.

   Tap **Display Baseline** or **Hide Baseline** to display or hide the QT baseline waveform.

9.7.6 Changing QT Settings

Setting QT Alarm Properties

Perform the following procedure:

1. On the main screen, tap the monitoring information area to enter the **Monitoring** details interface.
2. Select the QT numerics area, ECG numeric area, or waveform area to open the **QT** menu.
3. Tap **Alarm** tab.
4. Set QTc and ΔQTc alarm properties.

Selecting Leads for QT Calculation

You can select one lead or all leads for QT calculation.

Perform the following procedure:

1. On the main screen, tap the monitoring information area to enter the **Monitoring** details interface.
2. Select the QT numerics area, ECG numeric area, or waveform area to open the **QT** menu.

3. Tap **Setup** tab.
4. Set **QT Leads**.

   All is selected by default. This means all leads are used for QT calculation.

9.8 ECG Relearning

Changes in ECG template could result in incorrect arrhythmia alarms and/or inaccurate heart rate.

This device provides the ECG learning function. ECG relearning allows the device to learn new ECG template so as to correct arrhythmia alarms and HR value.

Once learning is complete, the dominant QRS complex is stored as a reference template. The reference template is used as a normal morphology of that animal and it is compared with incoming beats to identify possible arrhythmias.

If you suspect that abnormal arrhythmia alarms are presented, you may need to manually initiate an ECG relearning.

9.8.1 Auto ECG Relearning

Auto arrhythmia relearning happens in the following situation:

1. The ECG lead type or lead label is changed.
2. ECG leads are off and are not reconnected within 60 seconds.
3. The animal's paced status is changed.

9.8.2 Manually Initiating an ECG Relearning

CAUTION

Initiate ECG relearning only during periods of predominantly normal rhythm and when ECG signal is relatively free of noise. If ECG relearning occurs during arrhythmia, abnormal QRS complex may be incorrectly learned as normal QRS complex, resulting in missed detection of subsequent arrhythmia.

Perform the following procedure:

1. Enter the monitoring details interface:
2. On the main screen, tap the monitoring information area to enter the **Monitoring** details interface.
3. Tap the ECG parameter area or waveform area to open the **ECG** menu.
4. Tap **Relearn**.

9.9 Calibrating ECG

The ECG signal may be inaccurate due to hardware or software problems. As a result, the ECG waveform amplitude becomes greater or smaller. In that case, you need to calibrate the ECG module. This function is password protected.

9.10 Troubleshooting

This section lists the problems that might occur. If you encounter problems when using the device or accessories, check the table below before requesting for services. If the problem persists after you have taken corrective actions, contact the Customer Service Department or your local distributor.

Problem	Solution
Do not see ECG numeric area or waveform area on the main screen	• Check that ECG is set to display in the **Tile Layout** menu. • Check that if the ECG parameter switch is enabled. If not, enable the ECG measurement. • Check that the cable connections of ECG electrode and the lead set are tight. Replace the ECG electrode or the lead set if needed.
Noisy ECG traces	• Check that electrodes are not detached or dry. Replace with fresh and moist electrodes if necessary. • Check that leadwires are not defective. Replace leadwires if necessary. • Check that animal cable or leadwires are routed too close to other electrical devices. Move the animal cable or leadwires away from electrical devices.
Muscle Noise	Inadequate skin preparation, tremors, tense subject, and/or poor electrode placement. • Perform skin preparation again and re-place the electrodes. • Apply fresh, moist electrodes. Avoid muscular areas.
Intermittent Signal	• Check that cables are properly connected. • Check if the electrodes get loose or the conductive paste of the electrodes gets dry. Perform skin preparation again and re-place the electrodes. • Check that the animal cable or leadwires are not damaged. Change them if necessary.

Problem	Solution
Excessive alarms: heart rate, lead fault	• Check that electrodes are not dry. Perform skin preparation again and re-place the electrodes. • Check for excessive animal movement or muscle tremor. Reposition the electrodes. Replace with fresh and moist electrodes if necessary. If necessary, replace with a new moist electrode pad.
Low Amplitude ECG Signal	• Check that the ECG gain is not set too low. Adjust the gain as required. • Perform skin preparation again. • Check electrode application sites. Avoid bone or muscular area. • Check that electrodes are not dry or used for a prolonged time. Replace with fresh and moist electrodes if necessary.
No ECG Waveform	• Check that the ECG gain is not set too low. Adjust the gain as required. • Check that the leadwires and animal cables are properly connected. • Check that the animal cable or leadwires are not damaged. Change them if necessary.
Base Line Wander	• Check for excessive animal movement or muscle tremor. Secure leadwires and cable. • Check that electrodes are not detached or dry and replace with fresh and moist electrodes if necessary. • Check for ECG filter setting. Set ECG Filter mode to **Monitor** to reduce baseline wander on the display.

10 Monitoring Respiration

10.1 Overview

Impedance respiration is measured across the thorax. When the animal is breathing or ventilated, the volume of air changes in the lungs, resulting in impedance changes between the electrodes. Respiration rate (RR) is calculated from these impedance changes, and a respiration waveform appears on the screen.

WARNING

- When monitoring the animal's respiration, do not use ESU-proof ECG cables.
- If you do not set the detection level for the respiration correctly in manual detection mode, it may not be possible for the device to detect apnea. If you set the detection level too low, the device is more likely to detect cardiac activity, and to falsely interpret cardiac activity as respiratory activity in the case of apnea.
- The respiration measurement does not recognize the cause of apneas. It only indicates an alarm if no breath is detected when a pre-adjusted time has elapsed since the last detected breath. Therefore, it cannot be used for diagnostic purpose.
- If operating under conditions according to the EMC Standard IEC 60601-1-2 (Radiated Immunity 3V/m), field strengths above 3V/m may cause erroneous measurements at various frequencies. Therefore, it is recommended to avoid the use of electrically radiating equipment in close proximity to the respiration measurement unit.

NOTE

- Respiration monitoring is not for use on the animals who are very active, as this will cause false alarms.
- After changing the respiration gain, check whether the threshold setting is reasonable.

10.2 Starting the Monitoring

Perform the following procedure:

1. Wear the Vet Harness for ICU.

   For details, see its accompanying manual.

2. Prepare the animal's skin:

Proper skin preparation is necessary for good signal quality at the electrode, as the skin is a poor conductor of electricity. To properly prepare the skin, choose flat areas and then follow this procedure:

1. Shave hair from skin at chosen sites.

2. Gently rub skin surface at sites to remove dead skin cells.

3. Thoroughly cleanse the site. It is not recommend using ether or pure alcohol, because this dries the skin and increases the resistance.

4. Dry the skin completely before applying the electrodes.

3. Set the respiration lead:

1. Enter the **Monitoring** details interface, tap the **Resp** numeric area or waveform area to open the **Resp** menu.

2. Select **Setup** > **Resp Lead** to choose the appropriate respiration lead.

4. Attach the clips or snaps to the electrodes before placing them.

Check that electrode packages are intact and the electrodes are not past the expiry date. Make sure the electrode gel is moist. Attach the snaps to the electrodes before placing electrodes on the animal.

5. Place the electrodes on the prepared sites.

Exhaust all air between the electrode pads and the animal's skin.

Standard ECG cable and electrode placement methods are used for respiration measurement. The respiration signal is measured between two ECG electrodes. If a standard ECG electrode location is used, the two electrodes are the RA (right forelimb) and LA (left forelimb) electrodes for lead I, or the RA (right forelimb) and LL (left forelimb) electrodes for lead II.

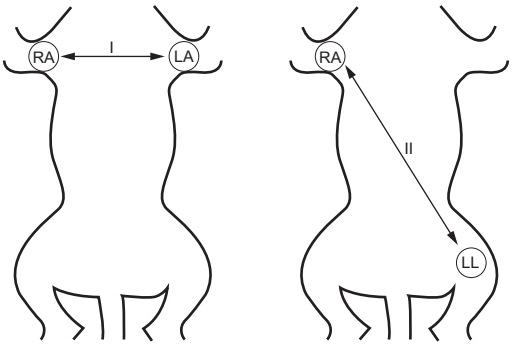

NOTE

- To optimize the respiration waveform, place the RA and LA electrodes horizontally when monitoring respiration with ECG Lead I; place the RA and LL electrodes diagonally when monitoring respiration with ECG Lead II.
- Optimizing Lead Placement for Resp: If you want to measure Resp and you are already measuring ECG, you may need to optimize the placement of the two electrodes between which Resp will be measured. Repositioning ECG electrodes from standard positions results in changes in the ECG waveform and may influence ST and arrhythmia interpretation.
- Cardiac Overlay: Cardiac activity that affects the Resp waveform is called cardiac overlay. It happens when the Resp electrodes pick up impedance changes caused by the rhythmic blood flow.

Correct electrodes placement can help to reduce cardiac overlay: avoid the liver area and the ventricles of the heart in the line between the respiratory electrodes.

- Abdominal Breathing: Some animals with restricted movement breathe mainly abdominally. In these cases, you may need to place the left leg electrode on the left abdomen at the point of maximum abdominal expansion to optimize the respiratory waveform.
- Lateral Chest Expansion: Some animals expand their chests laterally, causing a negative intrathoracic pressure. In these cases, it is better to place the two respiration electrodes in the right midaxillary and the left lateral chest areas at the animal's maximum point of the breathing movement to optimize the respiratory waveform.

6. Adjust parameters in the **Resp** menu to obtain the optimized waveform display.

10.3 Results Display

The measurement results are displayed on the main screen and the **Monitoring** details interface.

Figure 10-1 Resp results on the main screen

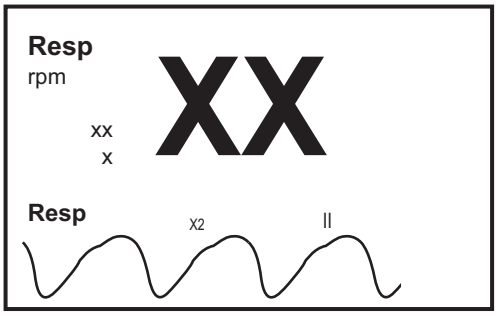

Figure 10-2 Resp results on the monitoring details interface

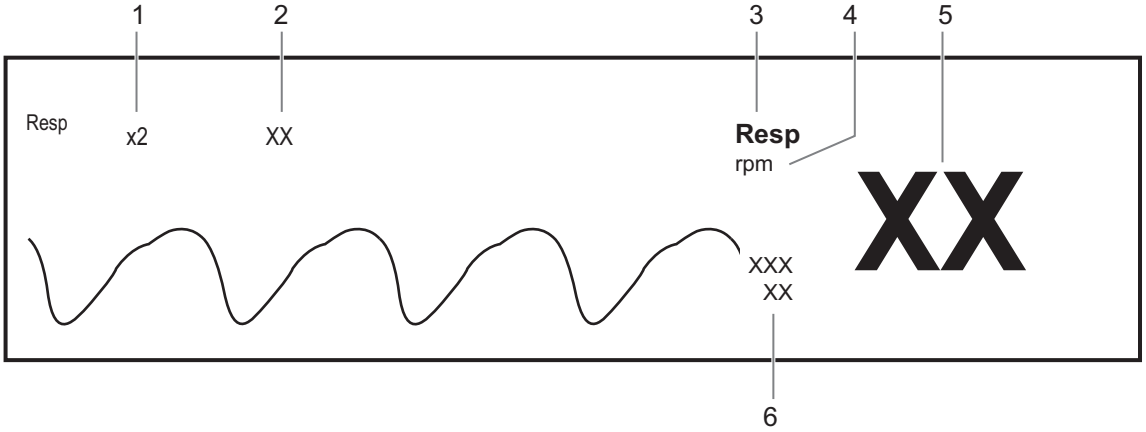

1.	Resp waveform gain
2.	Resp lead
3.	Parameter label
4.	RR unit

5.	Respiration rate (RR)
6.	Alarm limits

10.4 Parameters Setup

Enter the **Monitoring** details interface, tap the **Resp** numeric area or waveform area to open the **Resp** menu.

Setting the Resp Alarm Properties

Perform the following procedure:

1. Select the **Alarm** tab.
2. Set alarm properties as desired.

Input the password if necessary.

Changing Resp Settings

Perform the following procedure:

1. Select the **Setup** tab.
2. Adjust parameters as required:

Item	Description
RR Source	Set the RR source. **TIP** When you select **Auto**: the device automatically selects RR source according to the priority.
Resp Lead	Set the respiration lead for optimal respiratory waveform.
Gain	Set the Resp waveform size. **TIP** After changing the respiration gain, check whether the threshold setting is reasonable.
Speed	Set the Resp waveform speed.

Item	Description
Auto Threshold Detection	Switch on/off the Auto Threshold Detection function. • If **Auto Threshold Detection** is switched on, the device automatically adjusts the Resp waveform detection level, or threshold. In the auto detection mode, if ECG is switched off when you are monitoring respiration, the device cannot compare ECG and RR to detect cardiovascular artifact. To avoid cardiovascular artifact being interpreted as respiration, the respiration threshold is automatically set higher. • If **Auto Threshold Detection** is switched off, adjust the Resp waveform threshold. In the manual detection mode, cardiac overlay can in certain situations trigger the respiration counter. This may lead to a false indication of a high respiration or an undetected apnea condition. If you suspect that cardiac overlay is being registered as breathing activity, raise the detection level above the zone of cardiac overlay. If the Resp wave is so small that raising the detection level is not possible, you may need to optimize the electrode placement.

Adjusting the Resp Waveform Detection Threshold

It is recommended to use the manual detection mode in the following situations:

- The animal's RR is close to HR.
- The animal has intermittent mandatory ventilation.
- Respiration is weak. Try repositioning the electrodes to improve the signal.

Perform the following procedure:

1. Enter the **Monitoring** details interface, tap the Resp numeric area or waveform area to open the **Resp** menu.
2. Select the **Threshold** tab.
3. Select the up and down arrows corresponding to **Upper Line** and **Lower Line** to define the Resp waveform threshold.

Once set, the detection level will not adapt automatically to different respiration depths. It is important to remember that if the depth of breathing changes, you may need to change the detection level.

11 Monitoring Pulse Oxygen Saturation

11.1 Overview

Pulse Oxygen Saturation (SpO_2) monitoring is a non-invasive technique used to measure the amount of oxygenated haemoglobin and pulse rate by measuring the absorption of selected wavelengths of light. The light generated in the emitter side of the probe is partly absorbed when it passes through the monitored tissue. The amount of transmitted light is detected in the detector side of the probe. When the pulsative part of the light signal is examined, the amount of light absorbed by the haemoglobin is measured and the pulse oxygen saturation can be calculated. This device is calibrated to display functional oxygen saturation.

WARNING

- Measurement accuracy verification: The SpO_2 accuracy has been verified by comparing with arterial blood sample reference measured with a CO-oximeter. Pulse oximeter measurements are statistically distributed and about two-thirds of the measurements are expected to come within the specified accuracy range compared to CO-oximeter measurements.
- A functional tester or SpO_2 simulator can be used to determine the pulse rate accuracy.
- A functional tester or SpO_2 simulator cannot be used to assess the SpO_2 accuracy.
- Dye (e.g. Indocyanine Green) or other substances, containing dyes which usually modify the light absorption capacities, can lead to faulty measurement values of the oxygen saturation.
- The SpO_2 sensors and cables have been tested and validated for conformity with the standard IEC 60601-2-61 with the device.
- If the animal has a trend of deoxygenation, analyze the blood samples with a laboratory CO-oximeter to completely understand the animal's condition.
- Do not use the device or SpO_2 sensors during MRI scanning or in an MRI environment. Induced current could potentially cause burns. The device may affect the MRI image, and the MRI device may affect the accuracy of the SpO_2 measurements.
- Prolonged continuous monitoring may increase the risk of undesirable changes in skin characteristics, such as irritation, reddening, blistering or burns. Inspect the sensor site every 2 hours and move the sensor if the skin quality changes. For animals with poor peripheral blood circulation or sensitive skin, inspect the sensor site more frequently.

- Setting alarm limits to extreme values may cause the alarm system to become ineffective. For example, high oxygen levels may predispose a premature infant to retrolental fibroplasia. Setting the SpO_2 high alarm limit to 100% is equivalent to switching off the SpO_2 alarm.

CAUTION

- Select proper SpO_2 sensor according to application site. Applying sensor too tight may severely obstruct circulation and lead inaccurate measurements. Loose application may result in measurement site exposing to ambient light.
- When monitoring SpO_2 at high ambient temperature, to avoid burns at the application site that is not well perfused, pay attention to prolonged SpO_2 sensor application.
- Avoid placing the SpO_2 sensor on the same extremity with an NIBP cuff, arterial catheter, or intravascular line.

11.2 Measurement Limitations

The following factors may influence the accuracy of SpO_2 measurement:

- Animal physiological characteristics
  - Cardiac arrest
  - Hypotension
  - Darkly pigmented skin
  - Shock
  - Severe vasoconstriction
  - Hypothermia
  - Severe anemia
  - Ventricular septal defects (VSDs)
  - Venous pulsations
  - Poor perfusion
- Interfering substances
  - Intravascular dyes (such as indocyanine green, methylene blue, indigo carmine, etc.)
  - Non-functional hemoglobin concentrations such as carboxyhemoglobin (COHb) and methemoglobin (MetHb)
  - Dyes in the measure site, such as nail polish
- Environmental conditions
  - Excessive ambient light
  - Electrosurgery equipment
  - Defibrillation (may cause inaccurate reading for a short amount of time)
  - Excessive animal/sensor motion
  - Electromagnetic field
- Others
  - Inappropriate positioning of the SpO_2 sensor, or use of incorrect SpO_2 sensor
  - Cuff or arterial blood pressure measurement device on the same limb as the SpO_2 sensor.

11.3 Starting the Monitoring

Perform the following procedure:

1. Clean the sensor and belt before and after each use.
2. Shave hair from skin at the measured site, and clean the measured site with medical alcohol or water.

TIP

- The optimal measured site for feline and canine animals is the base of the tail.
- The shaved area must be greater than the white area of the sensor belt.

3. Bind the sensor to the base of the tail from bottom to up, and ensure the white area of the sensor belt falls within the shaved area.

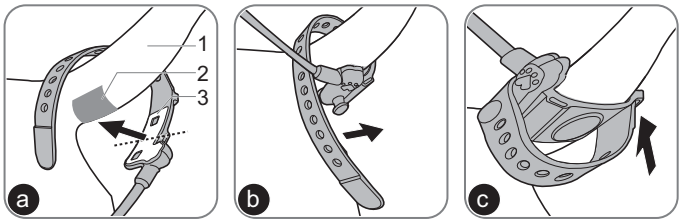

1.	Animal tail
2.	Shaved area below the base of the tail
3.	White area of the sensor belt

1. Stretch the belt naturally to fix the sensor reliably but do not stretch it too tightly.
2. Insert the mushroom-shaped buckle into the adjacent hole.
3. Pull the belt and allow it to go through the belt fastener.
4. After binding, gently pull the belt to ensure that it does not move.
Ensure that the sensor cable is positioned along the side of the animal tail to avoid entanglement with the animal.

4. Connect the SpO_2 plug into the SpO_2 sensor connector of the Temp module.
5. Adjust parameters in the **SpO2** menu to obtain the optimized waveform display.

11.4 Results Display

The measurement results are displayed on the main screen and the **Monitoring** details interface.

Figure 11-1 SpO_2 results on the main screen

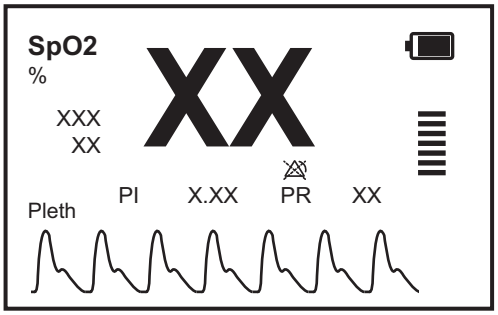

Figure 11-2 SpO_2 results on the monitoring details interface

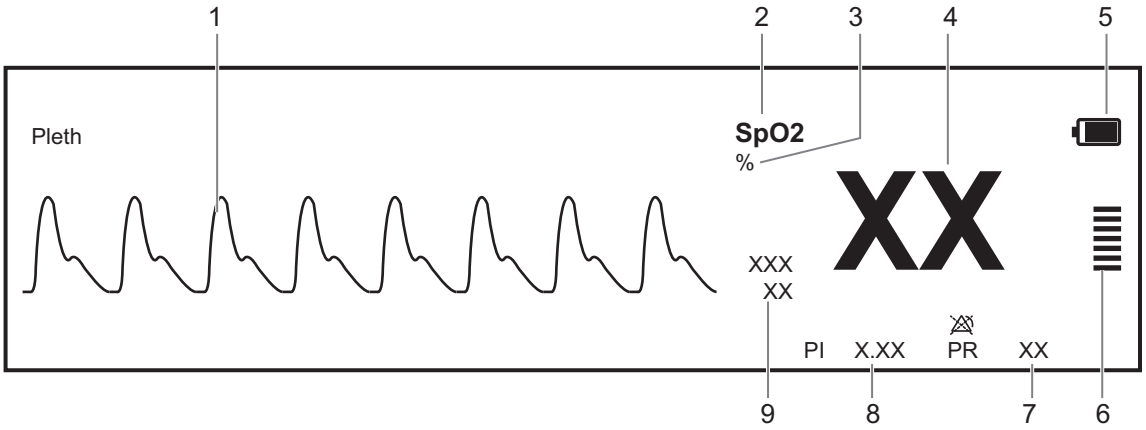

1.	Pleth waveform (Pleth): indicates the blood pulsation at the measurement site. The waveform is not normalized.
2.	Parameter label
3.	Unit
4.	Oxygen saturation of arterial blood (SpO_2): indicates the percentage of oxygenated hemoglobin relative to total hemoglobin.
5.	Battery capacity of SpO_2 module
6.	Perfusion indicator: the pulsatile portion of the measured signal caused by arterial pulsation. The higher the bar, the better the perfusion quality.
7.	Pulse rate: indicates the number of pulsations per minute.
8.	Perfusion index (PI): indicates the percentage of pulsate signal to non-pulsate signal. PI is an indicator of the pulsate strength. You can also use it to assess the SpO_2 signal strength. • Above 1 is optimal. • Between 0.3 and 1 is acceptable. • Below 0.3 indicates low perfusion. Reposition the SpO_2 sensor or find a better site. If low perfusion persists, choose another method to measure oxygen saturation if possible.
9.	Alarm limits

11.5 Parameters Setup

Enter the **Monitoring** details interface, tap the **SpO2** numeric area or waveform area to open the **SpO2** menu.

11.5.1 SpO_2 Parameters

Changing the SpO_2 Alarm Settings

Perform the following procedure:

1. Select **SpO2** > **Alarm**.
2. Set alarm properties as desired.

   Input the password if necessary.

   You can switch off the **SPO2 Desat Alarm Off** alarm only when **SpO2 Desat** is set to **Enable**.

Monitoring SpO_2 and NIBP Simultaneously

When monitoring SpO_2 and NIBP on the same limb simultaneously, you can switch on **NIBP Simul** to lock the SpO_2 alarm status until the NIBP measurement ends. If you switch off **NIBP Simul**, low perfusion caused by NIBP measurement may lead to inaccurate SpO_2 readings and therefore cause false physiological alarms.

Perform the following procedure:

1. Select **SpO2** > **Alarm**.
2. Switch to to enable **NIBP Simul**.

Changing the SpO_2 Settings

Perform the following procedure:

1. Select **SpO2** > **Setup**.
2. Adjust parameters as required:

Item	Description
Sensitivity	Set the averaging time if necessary. • **High**: 7s • **Med**: 9s • **Low**: 11s **TIP** The SpO_2 value displayed on the device screen is the average of data collected within a specific time. The shorter the averaging time is, the quicker the device responds to changes in the animal's oxygen saturation level. Contrarily, the longer the averaging time is, the slower the device responds to changes in the animal's oxygen saturation level, but the SpO_2 measurement is more stable. For critically ill animals, selecting shorter averaging time will help understanding the animal's condition.

Item	Description
Display PI	Set whether to display the PI value in the SpO_2 parameter area.
Speed	Set the sweep speed of Pleth waveform.

11.5.2 PR Parameters

Changing the PR Alarm Settings

Perform the following procedure:

1. Select **PR** > **Alarm**.
2. Set alarm properties as desired.

   Input the password if necessary.
3. Set **Alarm Source**.

Changing the PR Settings

Perform the following procedure:

1. Select **PR** > **Setup**.
2. Adjust parameters as required:

Item	Description
PR Source	Set the source of PR. The current PR source is displayed in the PR numeric area. **TIP** The PR from current pulse source has the following characteristics: • PR is monitored as system pulse and generates alarms when you select PR as the active alarm source. • PR is stored in the device's database and reviewed in the graphic/tabular trends; in trend graphs, as the PR curve is in the same color with that of the PR source, it is unlikely to distinguish the PR source. • PR data is sent to the CMS (if any).
Display PR	Set whether to display the PR value in the SpO_2 parameter area.
QRS Volume	Set the QRS volume. If the Alarm Source is set to **PR**, the QRS tone is derived from PR measurements. The device adjusts QRS volume by adjusting **QRS Volume**. If the SpO_2 value is effective, the device also adjusts the QRS tone (pitch tone) according to the SpO_2 value.

11.6 Troubleshooting

This section lists the problems that might occur. If you encounter the problems when using the device or accessories, check the table below before requesting for services. If the problem persists, contact the Customer Service Department or your local distributor.

Problem	Solution
Do not see SpO_2 numeric area or waveform area on the main screen.	• Check that the SpO_2 is set to display in the **Tile Layout** menu. • Check that if the SpO_2 parameter switch is enabled. If not, enable the SpO_2 measurement. • Check that the cable connections of SpO_2 sensor and the extension cable are tight. Replace the SpO_2 sensor or the extension cable if necessary.
Dashes “- -” display in place of numerics.	• Check that the cable connections of SpO_2 sensor and the extension cable are tight. Replace the SpO_2 sensor or the extension cable if necessary. • Reconnect the SpO_2 sensor if the alarm **SpO2 Sensor Off** appears. • Check the PI value. If the PI value is too low, adjust the SpO_2 sensor, or apply the sensor to the site with better perfusion. • Move the sensor to the place with weaker light, or cover the sensor with shade cloth if the alarm **SpO2 Excess Light** appears.
Low amplitude SpO_2 signal.	• The SpO_2 sensor and NIBP cuff are placed on the same limb. Change a monitoring site if necessary. • Check the PI value. If the PI value is too low. Adjust the SpO_2 sensor, or apply the sensor to the site with better perfusion. • Check the sensor and its application site.
SpO_2 value is inaccurate.	• Check the animal’s vital signs. • Check for conditions that may cause inaccurate SpO_2 readings. • Check the device or the SpO_2 module for proper functioning.

12 Monitoring Temperature

12.1 Overview

You can continuously monitor the animal's skin temperature and core temperature. Thermally sensitive resistors (thermistors) are used. They are based on the principle that electrical resistance of the thermistor changes as temperature changes. Thermistors measure the resistance change and use it to calculate the temperature.

NOTE

If the Temp module enters the standby mode, reconnect the 2-pin connector of the probe to the Temp module.

12.2 Starting the Measurement

Perform the following procedure:

1. Plug the probe to the temperature connector of the Temp module.
2. Insert the probe into the rectum or esophagus to a recommended depth of 5 cm to 10 cm.
3. Secure the probe:
   - When the probe is used with our 553V SpO_2 sensor, insert the fixing clamp into the fixing hole of the SpO_2 sensor and fasten the clamp.
   - Under other conditions, secure the temperature probe with tape or bandage.

For detailed information about the temperature probe, see the instructions delivered with it.

12.3 Results Display

The measurement results are displayed on the main screen and the **Monitoring** details interface.

Figure 12-1 Temperature results

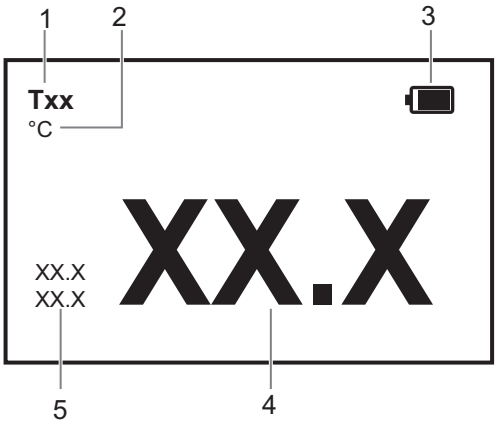

1.	Temperature site
2.	Temperature unit
3.	Battery capacity of Temp module
4.	Temperature value
5.	Alarm limits

12.4 Parameters Setup

Enter the **Monitoring** details interface, tap the **Temp** numeric area to open the **Temp** menu.

Setting the Temperature Alarm Properties

Perform the following procedure:

1. Select the **Alarm** tab.
2. Set alarm properties as desired.

   Input the password if required.

Changing Temperature Settings

Perform the following procedure:

1. Select the **Setup** tab.
2. Adjust parameters as required:

Item	Description
Temperature channel (T3) label	Set the temperature label according to the measurement site.

12.5 Troubleshooting

This section lists the problems that might occur. If you encounter the problems when using the device or accessories, check the table below before requesting for services. If the problem persists, contact the Customer Service Department or your local distributor.

Problem	Solution
Do not see Temp numeric area on the main screen.	• Check that the Temp is set to display in the **Screen Setup** menu. • Check that if the Temp parameter switch is enabled. If not, enable the Temp measurement. • Check that the connections of the temperature probe and the temperature cable are tight.
Measurement fails/'--' is displayed in the Temp numeric area.	• If you are using a disposable probe, check the connection between the probe and the temperature cable. • Try using a known good probe in case the sensor is damaged.

13 Monitoring Noninvasive Blood Pressure

13.1 Overview

The device uses the oscillometric method for measuring the non-invasive blood pressure (NIBP). NIBP measurement is based on the principle that pulsatile blood flow through an artery creates oscillations of the arterial wall. The oscillometric device uses a blood pressure cuff to sense these oscillations that appear as tiny pulsations in cuff pressure. The oscillometric method measures the mean pressure and determines the systolic and diastolic pressures.

WARNING

- Be sure to select the correct species setting for your animal before NIBP measurement.
- Do not perform NIBP measurements on animals with sickle-cell disease.
- Use clinical judgment to determine whether to perform frequent unattended blood pressure measurements on animals with severe blood clotting disorders because of the risk of hematoma in the limb fitted with the cuff.
- To avoid the risk of animal injury, do not apply the NIBP cuff on a limb that has an intravenous infusion or catheter in place. Apply the cuff on another limb if possible.
- Continuous cuff pressure due to connection tubing kinking may cause blood flow interference, and resulting in harmful injury to the animal.
- NIBP reading can be affected by the measurement site, the position of the animal, exercise, or the animal's physiologic condition. If you doubt the NIBP measurements, determine the animal’s vital signs by alternative means, and then verify that the device is working correctly.
- Taking NIBP measurements exert pressure on the animal's tissue. This can cause skin purpura, ischemia, and neuropathy. Periodically check the cuff site and the limb distal to the cuff for normal color, warmth and sensitivity. If there is a sign of skin change or poor distal circulation, move the cuff to another limb or stop NIBP measurements. Check more frequently when using the STAT mode or using the auto mode at short intervals. Auto NIBP measurements with one and two minute intervals are not recommended for extended periods of time.
- NIBP diagnostic significance must be decided by the physician.

CAUTION

- Using IABP may cause NIBP, including PR, measurements inaccurate or failed.
- Only use parts and accessories specified in this manual. Follow the instructions for use and adhere to all warnings and cautions.
- Accuracy of NIBP measurement depends on using a cuff of proper size. It is essential to measure limb circumference and choose a cuff with proper size.
- Using a cuff of wrong size, or a cuff with twisted bladder and kinked air tubing, can cause inaccurate measurements.
- Do not touch or apply external pressure against the cuff and air tubing during NIBP measurement. This may cause inaccurate blood pressure values.
- Use care when placing the cuff on an extremity used for monitoring other animal parameters.

NOTE

- Blood pressure measurements determined with this device are equivalent to those obtained by a trained observer using the cuff/stethoscope auscultatory method or an intra-arterial blood pressure measurement device, within the limits prescribed by the American National Standard: manual, electronic, or automated sphygmomanometers.
- NIBP measurement can be performed during electro-surgery and discharge of defibrillator.

13.2 NIBP Measurement Limitations

Measurements are impossible with heart rate extremes of less than 30 bpm or greater than 300 bpm, or if the animal is on a heart-lung machine.

The measurement may be inaccurate or impossible in the following situations:

- Regular arterial pressure pulses are hard to detect
- Excessive or continuous patient movement such as shivering or convulsions
- Cardiac arrhythmias
- Rapid blood pressure change
- Severe shock or hypothermia that reduces blood flow to the peripheries
- On an edematous extremity

13.3 Starting the Measurement

Perform the following procedure:

1. Verify that settings of species and weight value are set correctly on the device.
2. Select an appropriate size cuff for the animal.
3. Select a NIBP cuff by referring to the limb circumference marked on the NIBP cuff. The cuff width should be 40% of the circumference of the measurement site. Check that the NIBP cuff is completely deflated.

   For detailed information about the NIBP cuff, see the instructions delivered with it.
4. Apply the NIBP Cuff.

   Select a cuff position based on the patient type and weight.

   - When the animal is lying on the right side, left side or seated, place the NIBP cuff on the animal's limb.
   - When the animal appears agitated or when placing the cuff to larger animals, place the NIBP cuff on the base of the tail.
5. Connect the cuff to the air tubing. Avoid compression or restriction of pressure tubes. Air must pass unrestricted through the tubing.
6. Connect the air tubing to the NIBP connector of the NIBP module.
7. Use the back clip to hang the NIBP module on the hook inside the device.

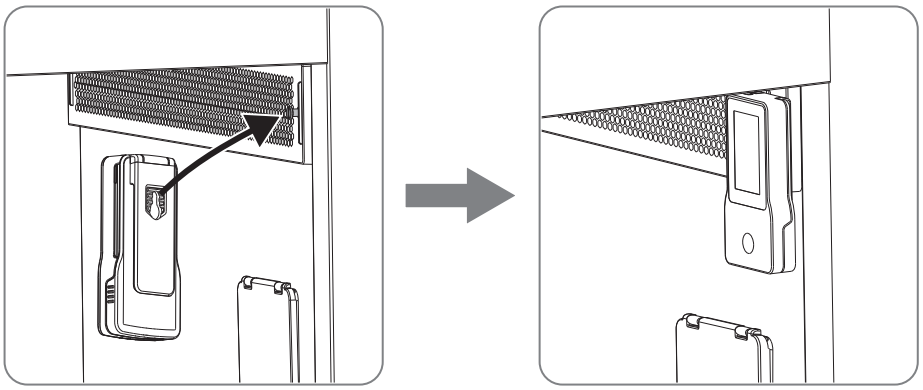

8. Adjust parameters or select the measurement mode in the **NIBP** menu if necessary.
9. Do one of the following to start the NIBP measurement:

- Enter the **Monitoring** details interface, tap **NIBP Start/Stop** quick key.
- Press the (Start/Stop) button of the NIBP module.

13.4 Results Display

NOTE

- If NIBP Measurement Failed is measured, the measured value is displayed as “XX”. If no measurement is performed, the measured value is displayed as “---”.
- When the NIBP measurement result is displayed as a hollow number, it indicates that the measurement result has exceeded the set expiration time and is not recommended as a reference.

The measurement results are displayed on the main screen and the **Monitoring** details interface.

Figure 13-1 NIBP results on the main screen

Figure 13-2 NIBP results on the monitoring details interface

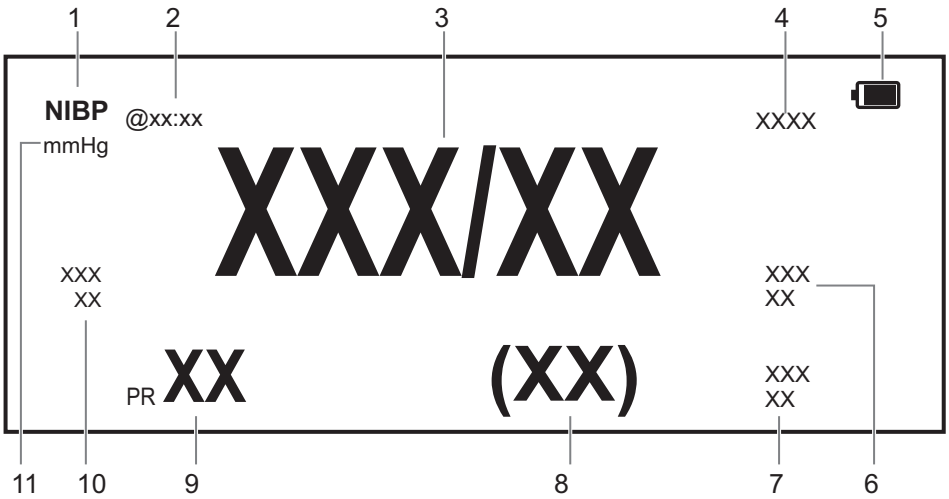

1.	Parameter label
2.	The last NIBP measurement time
3.	Systolic pressure/Diastolic pressure
4.	Measurement mode: for Auto NIBP, interval is displayed; for Sequence mode, the current phase and interval are displayed

5.	Battery capacity of NIBP module
6.	Diastolic pressure alarm limits
7.	Mean pressure alarm limits
8.	Mean pressure (displayed after measurement completed) or cuff pressure (displayed during the measurement)
9.	Pulse Rate
10.	Systolic pressure alarm limits
11.	NIBP unit: mmHg or kPa

13.5 Parameter Adjustment

Enter the **Monitoring** details interface, tap the **NIBP** numeric area or waveform area to open the **NIBP** menu.

Setting NIBP Alarm Properties

Perform the following procedure:

1. Select the **Alarm** tab.
2. Set alarm properties as desired.

Input the password if necessary.

Setting NIBP Parameters

Perform the following procedure:

1. Select the **Setup** tab.
2. Adjust parameters as required:

Item	Description
Initial Pressure	Set initial cuff inflation pressure.
Time Between Readings	For auto NIBP measurement, you need to set the interval between two NIBP measurements.
Start Mode	Set the NIBP start mode. • **Clock**: after the first measurement, the device automatically synchronizes NIBP automatic measurements with the real time clock. • **Time Between Readings**: after the first measurement, the device automatically repeats measurements at set interval.
NIBP End Tone	Enable the NIBP end tone. The device can issue a reminder tone at the completion of NIBP measurement.
Venipuncture Pressure	Set the cuff inflation pressure to help venous puncture.
Display Format	Set the display format of the artery pressure.

Item	Description
Display Alarm Limits	Set whether to display the alarm limits of diastolic NIBP and mean NIBP.
Display PR	Set whether to display the PR value in the NIBP parameter area.

Viewing NIBP Analysis

NIBP analysis provides you a dynamic analysis of NIBP changes and distribution over the time scale. It allows you to know the animal's condition of the latest 24 hours before you entering the **NIBP Analysis** interface.

Perform the following procedure:

1. Select **Analysis** in the **NIBP** menu.
2. Tap anywhere in the **NIBP Analysis** window to enter the **Patient Status Review** interface.

Setting NIBP Sequence

NIBP sequence measurement can have up to five phases: A, B, C, D, and E. You can individually set the duration and interval of each phase.

Perform the following procedure:

1. Select **Sequence** in the **NIBP** menu.
2. Set the **Duration** and **Time Between Readings** of each phase.

Assisting Venous Puncture

You can use the NIBP cuff to cause sub-diastolic pressure to block the venous blood vessel and therefore help venous puncture.

Perform the following procedure:

1. Select **Setup** in the **NIBP** menu.
2. Set **Venipuncture Pressure**.
3. Tap **Venipuncture**.
4. Puncture vein and draw blood sample.

   During venous puncture, pay attention to the cuff pressure and the remaining time displayed in the NIBP numerics area.
5. Tap the **NIBP Start/Stop** quick key to deflate the cuff.

13.6 Correcting the NIBP Measurements

The middle of the cuff should be at the level of right atrium. If the limb is not at the heart level, you need to correct the measurement:

- Add 0.75 mmHg (0.10 kPa) to the displayed value for each centimeter higher.
- Deduct 0.75 mmHg (0.10 kPa) to the displayed value for each centimeter lower.

13.7 NIBP Leakage Test

The NIBP leakage test checks the integrity of the system and of the valve. The NIBP leakage test should be performed once every 2 years or when you doubt the NIBP measurements. The NIBP leakage test should be performed by Mindray Animal Medical-qualified service personnel only.

13.8 NIBP Accuracy Test

The NIBP accuracy test should be performed once every 2 years or when you doubt the NIBP measurements. The NIBP accuracy test should be performed by Mindray Animal Medical-qualified service personnel only.

14 Infusion

14.1 Safety Information

WARNING

- Clearing the occlusion result from line kinks, filter coagulation, etc. may cause extra bolus to animals. Appropriate measures should be taken.
- To ensure the accuracy of air bubble detection, check and remove the remained fluid in the infusion set slot before loading the infusion set.
- While loading the infusion set, do not touch the anti free-flow clamp to avoid injury.
- Try to keep the heart of the animal in the same horizontal level as the infusion pump. The most accurate pressure monitoring in the infusion set is achieved when the infusion pump is positioned close to the animal's heart level.
- We recommend you to use an infusion set stated in this manual. If a non-recommended infusion set must be used or a different set needs to be changed, perform the calibration and performance test before use. Otherwise, the accuracy of the infusion and the performance of the device may be adversely affected.
- To ensure the accuracy of rate and alarm detection, the infusion set should be calibrated in the device before first use.
- Single use accessories are not designed to be reused. Reuse may cause a risk of contamination and affect the measurement accuracy.
- Do not connect an animal until disposables have been purged and loaded into the infusion pump.
- Before infusion starts or after infusion stops, check that no drops are falling in the drip. If drips are falling, do not use the device, and contact the Customer Service Department or your local distributor.
- Do not start an infusion unless the setup was verified to be correct.
- Ensure that the device is properly secured and positioned. Position change and severe shock may lead to changes to the delivery accuracy.

CAUTION

- When several infusion lines are connected to the same vascular access, there may be back flow or prolonged response time of occlusion alarm. Therefore, use check valve at the line end or follow local hospital's instructions while in connection with other infusion system.
- Make sure the current selected infusion set brand is the same as the brand actually used, or its accuracy cannot be guaranteed.

NOTE

- Make sure the roller clamp is closed before opening the pump door.
- Take care that your hands are not squeezed when you close the pump door.
- Make sure that the infusion set is located in both sides of the tubing channel notches after loading the infusion set.
- Monitor the connection of infusion set, tubing, infusion pump and animal, and the drug information on a regular basis. Start infusion according to the instructions in this manual.

14.2 Preparing the IV Container

The height between the IV container and the infusion pump is critical to the flow accuracy.

Perform the following procedure:

1. Hang the IV container onto the infusion hook.

   The external IV stand arm can be installed. For the installation and adjustment methods, see its accompanying instructions.

2. Adjust the height of the infusion pump so that there is 51 ± 5 cm (20 ± 2 in.) between the fluid line and the middle of the infusion pump.

   Distances outside of this tolerance can adversely affect flow accuracy.

14.3 Loading the Infusion Set

Perform the following procedure:

1. Pull the door holder to open the pump door.

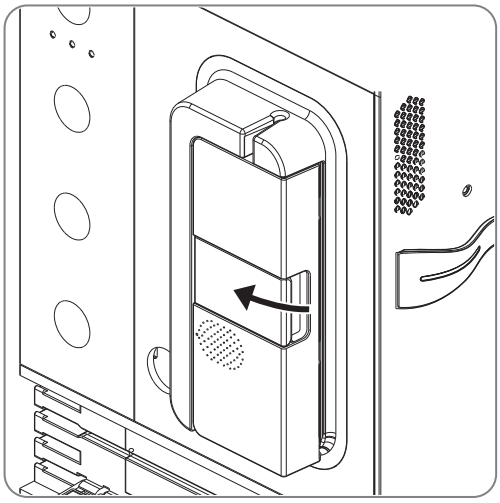

2. Install the infusion line:

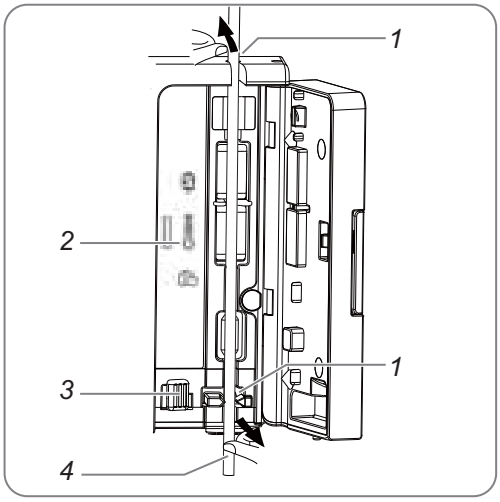

1.	Tubing channel notches
2.	Flow direction indicator
3.	Release lever
4.	Infusion line

1. Pull the release lever (3) upward left to release the anti free-flow clamp.

2. Avoiding any slack, insert the infusion line into the tubing channel notches (1) by following the flow direction indicator (2).

Ensure that the infusion set is straightly and firmly clipped into the tubing channel notches (1) on both sides of the casing.

3. Close the pump door.

14.4 Purge

NOTE

- The volume used for purging is not added to the infused volume.

- The **Air in Line** or **Accumulated Bubble** alarm will not pop up during purging.

The infusion set should be purged prior to being connected to the animal.

Perform the following procedure:

1. Ensure that the infusion pump is disconnected from the animal.
2. On the main screen, tap the infusion information area to enter the **Infusion** details interface.

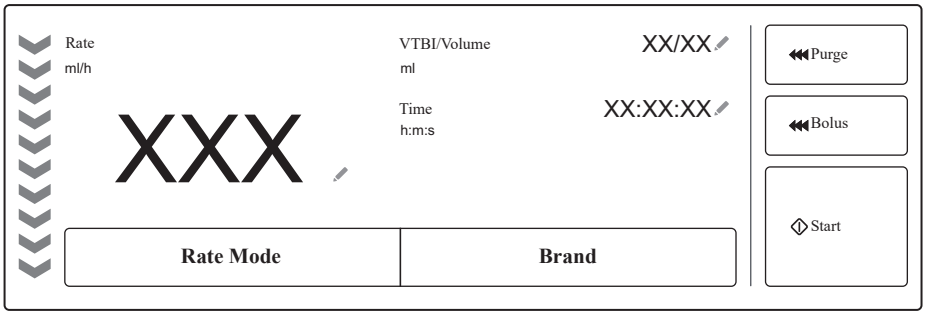

3. Tap **Purge** to enter the **Purge** prompt screen.
4. Tap **Purge** to start purge.
5. Tap **Stop** to complete purge after the air bubbles are purged.

14.5 Starting Infusion

Perform the following procedure:

1. On the main screen, tap the infusion information area to enter the **Infusion** details interface.
2. Tap **Brand** to select the infusion set brand.
3. Set infusion parameters:
   - Tap of **Rate**, **VTBI** and **Time** to input the desired value. When two of these parameters are entered, the third is calculated.
   - Set other infusion parameters:

     Tap **Infusion Setup** to open the **Infusion Setup** menu:

Item	Description
Occlusion Pressure	Set the occlusion alarm limit. The device gives the **Downstream Occlusion** alarm when the occlusion pressure exceeds the alarm limit.
Bubble Size	Set the alarm limit for the size of single air bubble. The device gives the **Air in Line** alarm when the size of single air bubble exceeds the alarm limit.
Accumulated Bubble	Set the alarm limit for the volume of accumulated air bubble. The device gives the **Accumulated Bubble** alarm when the accumulation air bubble volume exceeds the alarm limit.

Item	Description
KVO Rate	Set the KVO rate. If KVO rate is set to zero, the device stops infusion when VTBI is completed. If the KVO rate is set to 0, the device will not initiate a KVO infusion when the preset volume is complete. **TIP** • If the KVO rate is greater than the infusion rate, the device will continue to infuse at the set infusion rate. • The device runs for 30 minutes at a KVO rate. At the completion of the KVO infusion, the device stops infusion, and gives a **KVO Complete** alarm. • The volume used during KVO infusion will be added to the total infusion volume.
Auto Bolus Limit	Set the upper limit for automatic bolus.
Manual Bolus Limit	Set the upper limit for manual bolus.
Time Near End	Set for how long the **Infusion Near Done** alarm is triggered since the infusion is completed. When it is set to **Off**, the device does not give the **Infusion Near Done** alarm.
Pump Reminder	Set for how long the **Pump Reminder** alarm is triggered since the device is last operated. When it is set to **Off**, the device does not give the **Pump Reminder** alarm.

4. After setting infusion parameters, connect the infusion set to the animal.
5. Tap **Start** to start the infusion.

TIP

- The screen displays the running icon. An arrow moves from up to down and the speed of the arrow increases as the rate increases.
- The infusion parameters can also be adjusted as required during infusion.

14.6 Using the Heating Control

Perform the following procedure:

1. Open the cover of the infusion heating module.

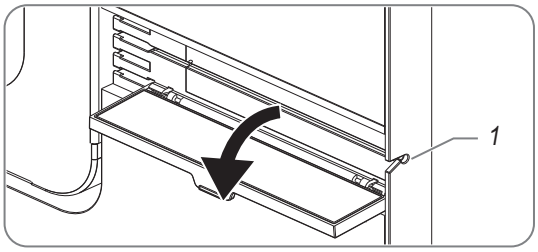

1.	Tubing channel notches

2. Secure the infusion line:

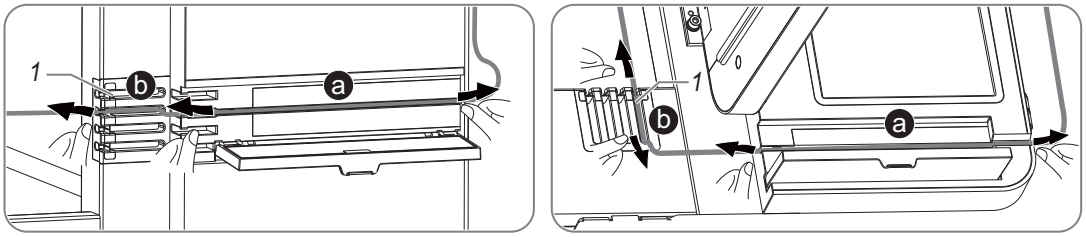

1.	Tubing channel notches

1. Straighten the infusion line and put it into the tubing channel notch (a) of the warmer.

2. Straighten the infusion line and put it into the tubing channel notch (b) of the cabin door.

3. On the main screen, tap the infusion information area to enter the **Infusion** details interface.

Set the heating parameters in the heating function area.

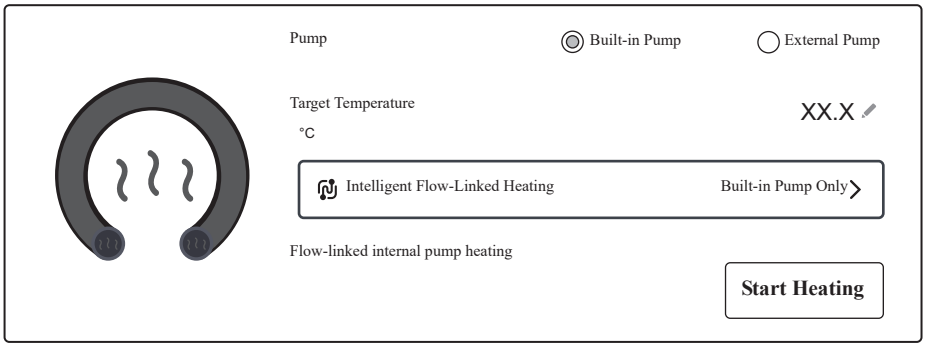

1. Select the infusion pump.

2. Set the value of **Target Temperature** as required.

3. If the selected infusion pump is **Built-in Pump**, you can enable the **Intelligent Flow-Linked Heating** function.

After this function is enabled, the warmer is synchronized with the flow rate of the built-in infusion pump to make the infusion temperature more precise.

4. Tap **Start Heating** to start the heating control function.

14.7 Completing Infusion

During the infusion, if the remaining infusion time is close to the **Infusion Near Done** set by the users, the **Infusion Near Done** alarm will be triggered. If no action has been taken, the alarm will not be canceled automatically until the infusion is completed, and then switch to **Infusion completed** alarm.

14.8 Replacing the IV Container

NOTE

Check the infusion status after replacing the IV container. If the device is running a KVO infusion, reconfigure the infusion parameters before restarting the infusion.

Perform the following procedure:

1. To prevent animal injury due to free flow, before replacing the IV container, please shut down the Robert clip (or flow rate regulator).

   During infusion, stop the infusion:

   1. On the main screen, tap the infusion information area to enter the **Infusion** details interface.
   2. Tap **Stop** to stop the infusion.
   3. Shut down the Robert clip (or flow rate regulator).

2. Remove the IV container from the IV pole, and replace a new container.

14.9 Unloading the Infusion Set

WARNING

It is recommended that the infusion sets be changed every 24 hours (or as per national hygiene regulations or manufacturer's instructions). If infusion sets not recommended by this manual are used, adjust the fixing site every 4 hours.

Perform the following procedure:

1. On the main screen, tap the infusion information area to enter the **Infusion** details interface.
2. Tap **Stop** to stop the infusion.
3. Disconnect the animal from the infusion set.
4. Pull the door holder to open the pump door.
5. On the outside of the pump, grasp the tubing on both sides of the pump and pull the tubing straight out of the pumping channel.

14.10 Checking the Total Infusion Volume

NOTE

- When the volume exceeds 9999 ml, it is automatically cleared.
- After the device is shut down, the total volume is automatically cleared.

Total infusion volume refers to the amount of liquid infused into the animal within a certain time.

On the main screen, tap the infusion information area to enter the **Infusion** details interface. You can view the current animal's infusion volume in the **Infused Volume** area.

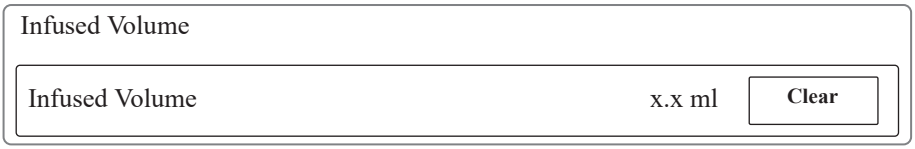

Tap **Clear** to pop up the confirmation dialog box. Tap **Clear** to manually clear the infusion volume.

The total infusion volume is automatically cleared after the current animal is discharged.

15 Monitoring Review

Trends are animal data collected over time and displayed in graphic, tabular, or other forms to give you a picture of how your animal's condition is developing.

15.1 Review Page

The review page contains tabs to display trend data in tabular, graphic, or other forms.

15.1.1 Accessing the Review Page

On the main screen, tap the monitoring information area to enter the **Monitoring** details interface. Tap **More** > **Review**, and then tap the required tab. If reviewing animal data is password protected, input the device's clinical password (local password).

15.1.2 Example Review Page

The review pages have similar structure. The Graphic Trends review page is taken as an example.

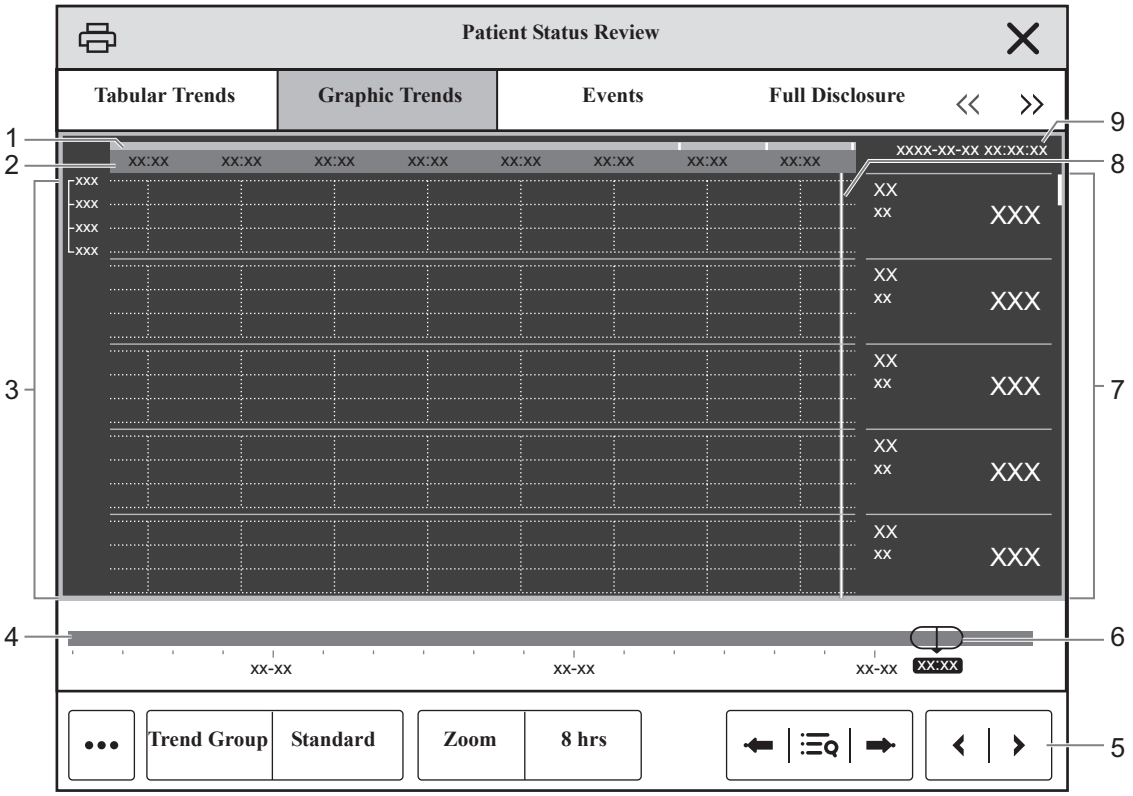

No.	Description
1.	Event type indicator: different color blocks match different types of events. • Red: high priority alarm event • Yellow: medium priority alarm event • Cyan: low priority alarm event • Green: manual event • White: operation-related event
2.	Current window time line: indicates the time length of the current window.
3.	Waveform area: displays trend curves. The color of trend curves is consistent with the color of parameter labels.
4.	Time line: indicates the entire time length. • : indicates the time length of reviewable trend data. can be moved within this time length. • : indicates the time length of no trend data. cannot be moved within this time length. • Different color blocks at the time line indicate events of different types. See the color definition for the event type indicator.
5.	Button area
6.	Slider: indicates the position of current window time in the entire time length. Dragging this button left or right enables you to locate the trend data at a specific time and also refreshes trend data in current window accordingly.
7.	Numeric area: displays numeric values at the cursor indicated time. The background color of numeric values matches the alarm priority.

No.	Description
8.	Event area: displays the event of the cursor time. Selecting the event accesses the event list. If there is no event at the cursor time, the cursor time is displayed.
9.	Cursor

15.1.3 Symbols on Review Pages

The following table lists the symbols on review pages.

Symbols	Description
	Slider: indicates the position of current window time in the entire time length. Dragging the slider left or right enables you to locate the trend data at a specific time and also refreshes data in current window accordingly.
	Goes to the previous or next event.
	Event list: displays events in a chronological order. The most recent event is displayed at the top. The number of exclamation symbols before an event matches alarm priority. The event that occurs most recently is displayed on the top of the list. Symbol Before Event (!) The quantity corresponds to different alarm priority values.
	Print button: select it to output animal information and data through the printer.

15.2 Common Operations

This section describes common operations for all review pages.

15.2.1 Browsing Trend Data

To browse trend data, choose any of the following ways:

- Move the slider .
- Move the cursor.
- Slide your finger on the screen.

15.2.2 Viewing Events

To view events, choose either of the following ways:

- Select and select the desired event.
- Select or to view the previous or next event.

15.3 Tabular Trends Review Page

The tabular trends review page displays trend data in a tabular form.

15.3.1 Entering the Tabular Trends Review Page

Select **Review** > **Tabular Trends** to enter the **Tabular Trends** review page.

15.3.2 Changing the Tabular Trend Group

To change the tabular trend group, follow this procedure:

1. Enter the **Tabular Trends** review page.
2. Tap **Trend Group**.

15.3.3 Editing the Tabular Trend Group

The setting of the **Trend Group** defines the contents of displayed and printed trends. To edit the tabular trend group, follow this procedure:

1. Enter the **Tabular Trends** review page.
2. Tap **Group Setup**.

NOTE

- You cannot edit trend group labeled **All** or **Standard**.
- ECG parameter and waveform are always displayed in the first row on the trend page. It cannot be deleted or moved.

15.3.4 Changing the Resolution of Trend Data

The resolution of tabular trends defines the interval of displaying trend data.

Enter the **Tabular Trends** review page, and then tap **Interval**:

- **5 sec** Or **30 sec**: select to view up to 4 hours of tabular trends at an interval of 5 seconds or 30 seconds.
- **1 min**, **5 min**, **10 min**, **15 min**, **30 min**, **1 hr**, **2 hrs**, **3 hrs**: select to view up to 120 hours of tabular trends at selected interval.
- **NIBP**: select to view the tabular trends when parameter measurements are acquired.

15.3.5 Printing a Tabular Trends Report

Perform the following procedure:

1. Enter the **Tabular Trends** review page.
2. Tap to open the **Print Setup** menu.
3. Set the tabular trends report as desired.
4. Tap **Print**.

15.4 Reviewing the Graphics Trends

The **Graphic Trends** review page displays trend data in a graphic form.

15.4.1 Entering the Graphic Trends Review Page

Select **Review** > **Graphic Trends** to enter the **Graphic Trends** review page.

15.4.2 Changing the Graphic Trend Group

To change the graphic trend group, follow this procedure:

1. Enter the **Graphic Trends** review page.
2. Tap **Trend Group**.

15.4.3 Editing the Graphic Trend Group

To edit the graphic trend group, follow this procedure:

1. Enter the **Graphic Trends** review page.
2. Select ●●● > **Group Setup**.
3. Select the desired tab.

15.4.4 Changing the Resolution of Trend Data

To change the length of trend data displayed on the current screen, follow this procedure:

1. Enter the **Graphic Trends** review page.
2. Set the **Zoom**.
   - **8 min**: the screen displays eight minutes of trend data. You can view the recent 1 hour data.
   - **30 min**, **1 hr**, **2 hrs**, **4 hrs**: the screen displays 30 minutes, 1 hour, 2 hours, or 4 hours of trend data. You can view the recent 4 hours data.
   - **8 hrs**, **12 hrs**, **24 hrs**, **48 hrs**: the screen displays eight hours, 12 hours, 24 hours, or 48 hours of trend data. You can view the recent 120 hours of data.

15.4.5 Changing the Number of Waveforms

Perform the following procedure:

1. Enter the **Graphic Trends** review page.
2. Select ●●● > **Trends**.
3. Set the **Trends**.

15.4.6 Printing a Graphic Trends Report

Perform the following procedure:

1. Enter the **Graphic Trends** review page.

2. Tap to open the **Print Setup** menu.
3. Set the tabular trends report as desired.
4. Tap **Print**.

15.5 Reviewing Events

The device stores events in real time, including technical alarm events, physiological alarm events, manual events, and operational events. When an event occurs, all the measurement numerics and the event-related waveforms 16 seconds before and after the event are stored.

NOTE

- A total loss of power has no impact on the events stored.
- The device saves this manual event automatically. Alarms are saved as events and will be maintained if the device is powered down. The time of device power down is not recorded as an event and cannot be reviewed.
- Earlier events will be overwritten by later ones if the capacity is reached.

Select **Review** > **Event** to enter the **Event** review page.

15.5.1 Configuring the Filter

You can filter events to facilitate event review.

Perform the following procedure:

1. Tap **Filter** to select the filter condition from drop-down list.

   You can customize two criteria. To do so, follow this procedure:

   1. From the **Filter** drop-down list, select **Custom 1** or **Custom 2** to open the **Filter Setup** menu.
   2. Tap the **Name** field to edit the name of the custom criterion.
   3. Select desired items.
   4. Tap **OK**.
   If you want to review events happened around certain time, select > set the time > **OK**. Then the cursor jumps to the event happened closest to the defined time.

15.5.2 Editing Events

Perform the following procedure:

1. Enter the **Event** page and tick off the desired events.
2. Tap ●●● to edit the selected events.

   - **Lock**: manually lock the event. When the event number reaches its maximum, the locked event will not automatically be deleted by the system.
   - **Unlock**: unlock the event.
   - **Delete**: delete the event.

- **Note**: enter comments for the event.
- **Select All**: select all the events.
- **Cancel All**: unselect all the events.
- **Show Disabled Arrhythmia Alarms**: This option is not selected by default. After this option is selected, the Event List displays the arrhythmia events when the alarm switch is set to Off.
- **Rename**: allow renaming an event name. Only manual events and arrhythmia events can be renamed if enabled by the hospital's settings.

15.5.3 Viewing Event Details

Perform the following procedure:

1. Enter the **Event** review page.
2. Tap **Detail**.

To display beat labels on the first ECG waveform, switch on **Beat Anno**. The white beat labels indicate heart beats classification and may explain suspected, missed, or false arrhythmia calls. Heart beats are classified as follows:

- N = Normal
- V = Ventricular ectopic
- S = Supraventricular premature
- P = Paced
- L = Learning
- ? = Insufficient information to classify beats
- I = Inoperative (for example, Lead Off)
- M = Missed beat

If the beat switch is set to **On** on the **Event** review page, the beat label is also displayed on the **Full Disclosure** review page and vice versa.

Tap **List** to return to the **Event** page.

15.5.4 Printing Event Reports

You can print event reports either via a printer.

Perform the following procedure:

1. Enter the **Event** review page.
2. Tap to open the **Print Setup** menu.
3. Select the desired options, and then **Print**.

- **Print All Event List**: print the entire event list.
- **Print List of Selected Events**: print the list of selected events.
- **Print Detail of Selected Events**: print the details of selected events.
- **Print Displayed Event Detail**: print the waveforms and parameters of the currently displayed event.
- **Print Overview of Selected Events**: print the overview of selected events.

15.6 Reviewing Full Disclosure

You can review up to 48-hour waveform data on the **Full Disclosure** review page. You can view both the compressed waveforms and numeric values.

Select **Review** > **Full Disclosure** to enter the **Full Disclosure** review page.

15.6.1 Selecting Waveforms

Before reviewing compressed waveforms, you must select waveforms you want to store and display.

Perform the following procedure:

1. Enter the **Full Disclosure** review page.
2. Tap **Setup** to enter the **Select Waveform** page.
3. Select the **Storage** tab and set the desired waveforms to be stored in the device.
4. Select the **Display(Maximum: 3)** tab and set the desired waveforms to be displayed.

NOTE

The more waveforms selected in the **Storage** column, the shorter the waveform storage time. The waveforms may not be stored for 48 hours. Please exert caution when selecting waveforms.

In case of alarms, the background of compressed waveform at the alarm time is highlighted as follows:

- Red: high alarm priority
- Yellow: medium alarm priority or low alarm priority

15.6.2 Setting the Scale and Duration

You can set the length and size of displayed compressed waveforms.

Perform the following procedure:

1. Enter the **Full Disclosure** review page.
2. Tap ●●●,and then set **Duration** and **Scale**.

15.6.3 Viewing Details of Compressed Waveforms

Perform the following procedure:

1. Enter the **Full Disclosure** review page.
2. Tap **Detail**.

You can perform the following operations on this page:

- Switch on **Beat Anno** the beat annotation is displayed in white font above the first ECG waveform.
- Tap ●●●, and then set **Speed**, **ECG Gain** and **Save As Event**.
- Tap **Overview** to switch to the compressed waveform page.

15.6.4 Printing the Full Disclosure Waveform Report

Perform the following procedure:

1. Enter the **Full Disclosure** review page.
2. Tap .
3. Set the time range for printing.
4. Tap **Print**.

15.7 ST Review Page

When ST analysis is enabled, the device saves ST segments and values at an interval of five minutes. You can review the latest 120 hours of ST data.

Select **Review** > **ST** to enter the **ST Review** page.

15.7.1 Setting the ST Reference

Perform the following procedure:

1. Enter the **ST Review** page.
2. Tap **Set Reference** to set the currently displayed ST as reference.

NOTE

The ST baseline is used as ST reference by default.

15.7.2 Displaying/Hiding the ST Reference

Perform the following procedure:

1. Enter the **ST Review** page.
2. Tap **Display Reference** or **Hide Reference**.

15.7.3 Displaying/Hiding Markers

Perform the following procedure:

1. Enter the **ST Review** page.
2. Tap **Display Marker** or **Hide Marker**.
   - **Display Marker**: ISO point, J point, and ST point are marked with white vertical lines in the ST template.
   - **Hide Marker**: ISO point, J point, and ST point are not displayed in the ST template.

15.7.4 Printing ST Data

Perform the following procedure:

1. Enter the **ST Review** page.
2. Locate the required time.
3. Tap .

15.8 Reviewing Discharged Animals

For discharged animals, you can review the trend data in the review page and the events.

Perform the following procedure:

1. Enter the **Patient** details interface, and then tap **Discharged Patients** quick key to enter the **Discharged Patients** dialog.
2. Enter the search criteria to view the desired animal.

   Select the desired animal from the animal list, and then tap **Delete** to delete the data of the selected animal.

16 Monitoring Auxiliary Function

16.1 Overview

The Auxiliary Function integrates some commonly used clinical guidelines and tools into the device. It puts the currently monitoring parameter measurements together and provides comprehensive analysis results.

The Auxiliary Function is not intended to replace the competent judgment of a clinician. It must be used in conjunction with observation of clinical signs and symptoms.

16.2 ECG 24h Summary

The ECG 24h Summary provides ECG statistics of the current animal over the latest 24 hours. It also displays the animal’s typical ECG strips.

NOTE

- The ECG 24h Summary function is intended for the current animal. It is not intended for discharged animals.
- Pacing statistics are only applicable to animals wearing pacemakers. Pacing statistics can be performed only when the patient's pacing status is set to On.
- ST statistics is available only when ST analysis is switched on.
- QT statistics is available only when QT analysis is switched on.
- Data displayed in the ECG 24h Summary is not recalculated.

16.2.1 Opening the ECG 24h Summary Window

Perform the following procedure:

1. Enter the **Monitoring** details interface.
2. Tap **Monitoring Setup** to open the **Monitoring Setup** menu.
3. Tap **ECG 24h Summary** from the **Auxiliary Function** column.

16.2.2 The Display of ECG 24h Summary

The following figure is an example of the ECG 24h Summary window:

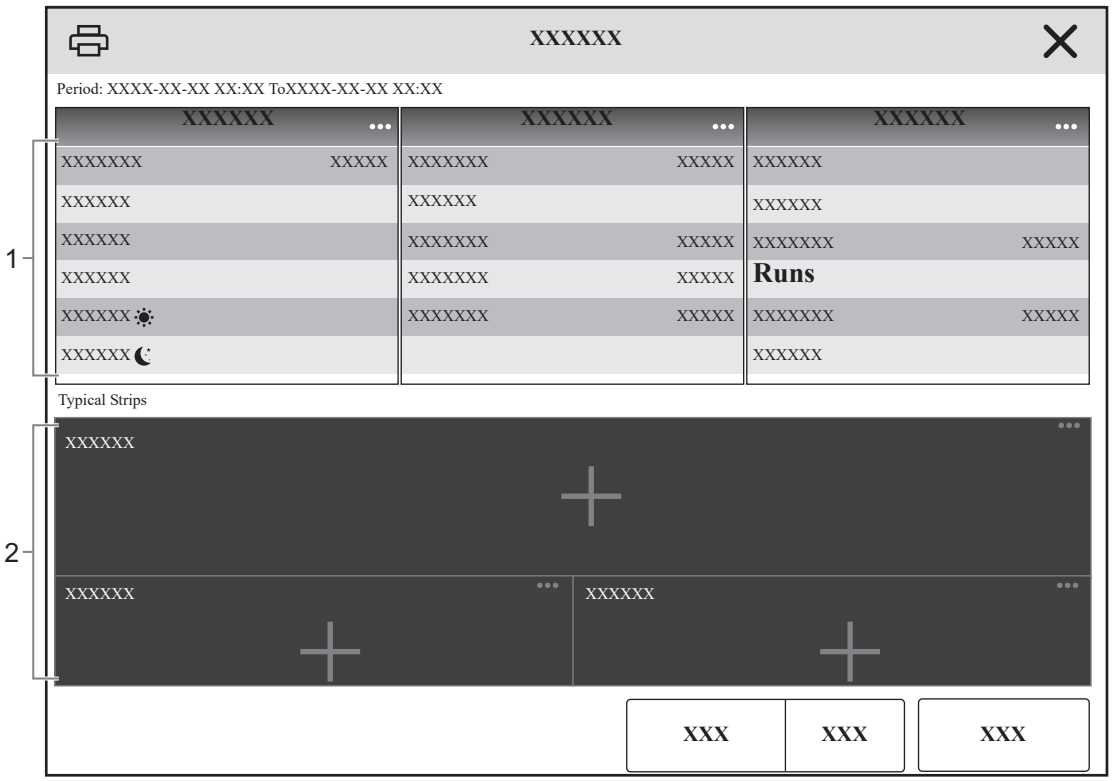

No.	Description
1.	ECG statistics, including the following items: • Statistics of heart rates • Statistics of ventricular beats and ventricular events • Statistics of supraventricular beats and supraventricular events • Statistics of QT/QTc measurements • Statistics of maximum ST elevations and depressions • Statistics of pace
2.	Typical ECG strips **Notes** area: includes additional information on the ECG 24h Summary.

16.2.3 Selecting Typical ECG Strips

Taking V-Tach as an example, to select typical V-Tach waveform, select the currently displayed V-Tach waveform, from the popup list select the desired waveform as typical V-Tach waveform.

If no V-Tach occurs to the animal within 24 hours, an add symbol + is displayed in the V-Tach area. You can select the add symbol + to display a typical ECG waveform of other event in this area.

16.2.4 Setting the Statistical Duration of the ECG 24h Summary

You can view a maximum of 24 hours of ECG statistics through the ECG 24h Summary. To select the statistical duration, select **Zoom**.

16.2.5 Reviewing the ECG Summary

Selecting any of the statistic area can access corresponding trends and events review. Selecting **Full Disclosure** can review ECG full disclosure waveforms.

16.3 ECG Library

NOTE

Due to the individual animal differences, the real-time waveform of the animal may not be completely consistent with the ECG reference waveforms, and the ECG reference waveforms are only for reference.

ECG Library screen is displayed on the left of the screen, displaying the following:

- ECG waveform within the first minute before entering the ECG library menu.
- ECG reference waveforms and characteristics description.

16.3.1 Entering the ECG Library Screen

Do one of the following to enter the ECG Library screen:

- Enter the **Monitor** details interface, tap **More** quick key, and then tap **ECG Library**.
- Enter the **Monitoring** details interface, tap **Monitoring Setup** to open the **Monitoring Setup** menu, and then tap **ECG Library** from the **Auxiliary Function** column.

16.3.2 The Display of ECG Library

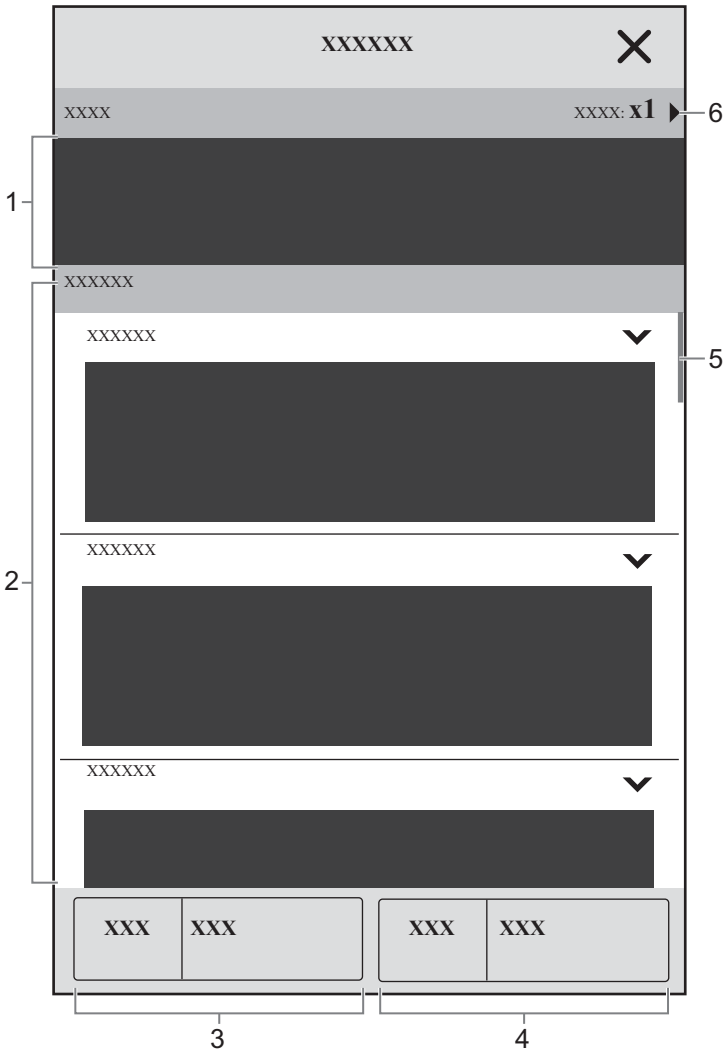

No.	Description
1.	**Frozen waveform**: displays ECG waveform with the speed of 25 mm/s within 1 minute before entering the ECG library menu. Swipe from left to right or right to left across the frozen waveform area to view the frozen waveform.
2.	**Reference waveform**: displays reference waveforms with the speed of 25 mm/s. Each waveform name is displayed in the upper left corner of its waveform fragment. Tap “v” to display the waveform characteristics.
3.	**Filter**: select to filter the reference waveforms according to the type.
4.	**Species**: select to filter the reference waveforms according to the species.
5.	Scroll bar: swipe up and down on the reference waveform area to view reference waveforms.
6.	**ECG Gain**: set the ECG gain in the frozen waveform area.

17 Printing

The device can output animal reports via network printer or printer server.

17.1 Supported Printer

The device supports the following printer:

- HP LaserJet Pro M202dw
- HP LaserJet Enterprise M605
- HP LaserJet P4015n
- HP LaserJet Pro 400 M401n
- HP LaserJet 600 M602
- HP LaserJet Enterprise M608
- HP LaserJet Enterprise M203dw
- HP LaserJet Pro M203dn

NOTE

For more details about the printer, see the document accompanying the printer. With product upgrades, the device may support more printers and no prior notice will be given. If you have any doubt about the printer you have purchased, contact the Customer Service Department or your local distributor.

17.2 End Case Reports

17.2.1 Printing the End Case Report

To print the end case report, choose one of the following ways:

- On the main screen, tap **More** > **End Case Report**.
- Select **Print End Case Report** > **OK** when you discharge an animal.

17.2.2 Setting a Report as An End Case Report

The following reports can be set as end case reports:

- **Tabular Trends Report**
- **Graphic Trends Report**
- **Event Report**
- **Alarm Limits Report**
- **Realtime Report**
- **ECG Summary**

Perform the following procedure:

1. On the main screen, tap the patient information area to enter the **Patient** detail screen.
2. Select **Patient Report** > **Select Reports**.
3. Select the checkbox before the desired report.
4. Tap **Print**.

17.2.3 Setting the End Case Report

Perform the following procedure:

1. On the main screen, tap the patient information area to enter the **Patient** detail screen.
2. Select **Patient Report** > **Report Setup**.
3. Tap the corresponding tab to set the report type as required.

17.2.4 Setting the End Case Report Period

NOTE

- End case report print period is calculated from the animal discharged time to the configured period.
- Period setting is applicable to all the end case report.

Perform the following procedure:

1. On the main screen, tap the patient information area to enter the **Patient** detail screen.
2. Select **Patient Report** > **Select Reports**.
3. Set the **Period**.

17.3 Stopping a Printing Task

Perform the following procedure:

1. On the main screen, tap the patient information area to enter the **Patient** detail screen.
2. Select **Patient Report** > **Print Queue**.
3. Select desired printing tasks and then tap **Delete**.

   Tap **Delete All** to stop all the printing tasks.

17.4 Setting Reports

This section focuses on how to set **Realtime Report**, **Tabular Trends Report**, **Graphic Trends Report**, and **Event Report**.

17.4.1 Setting Realtime Reports

Perform the following procedure:

1. On the main screen, tap the patient information area to enter the **Patient** detail screen.
2. Select **Patient Report** > **Report Setup**.
3. Tap **Realtime Report** tab.
4. Set the desired options.

   The following table only lists some of the options.

Item	Description
Speed	Set the print speed of ECG waveforms.
Select Waveform	Set the desired waveform to print. • **Current Waveforms**: prints the realtime report for current waveforms. • **Selected Waveforms**: prints the realtime report for the selected waveforms.

17.4.2 Setting Tabular Trends Reports

Perform the following procedure:

1. On the main screen, tap the patient information area to enter the **Patient** detail screen.
2. Select **Patient Report** > **Report Setup**.
3. Tap **Tabular Trends Report** tab.
4. Set the desired options.

   The following table only lists some of the options.

Item	Description
Interval	Set the resolution of the tabular trends printed on a report.
Report Format	Set the printing principle.
Trend Group	Set the desired graphic trend group to print.

17.4.3 Setting Graphic Trends Reports

Perform the following procedure:

1. On the main screen, tap the patient information area to enter the **Patient** detail screen.
2. Select **Patient Report** > **Report Setup**.
3. Tap **Graphic Trends Report** tab.
4. Set the desired options.

17.5 Viewing Printer Status

Tap the patient information area on the main screen to enter the **Patient** details interface, and then select **Patient Report** > **Print Queue** to view the status of printing tasks.

You can view the status of the recent ten printing tasks in the **Print Queue** window.

Each printing task includes the following information:

- Print time
- Report title
- Printer name (when using the printer server) or IP address (when using the network printer)
- Print Status: **Printing**, **Fail**, **Retry**, **Waiting**, and so on

17.6 Printer Out of Paper

Ensure that there is enough paper in the printer before sending a print request.

When the printer runs out of paper, the print request will not be responded. If there are too many print jobs that are not responded, a printer error may occur. In these cases, you need to install paper and then re-send the print request. Restart the printer if necessary.

18 Networked Monitoring

18.1 Overview

You can connect the device to the central monitoring system (CMS) through wired LAN or wireless LAN.

18.2 Safety Information

CAUTION

- Wireless network design, deployment, debugging, and maintenance should be executed by Mindray Animal Medical service personnel or authorized technicians.
- Always deploy the wireless network according to local wireless regulations.
- Using 5G frequency band is recommended whenever possible. There are more interference sources in 2.4G frequency band.
- Private APs and wireless routers are not allowed. These devices may cause radio interference and result in the device and CMS data loss.
- To ensure network security and stability, data communication must be performed within a closed network or within a virtually isolated hospital network. The hospital is responsible for ensuring the security of the virtually isolated network.
- WPA2-PSK and WPA2-Enterprise verification and encryption should be used if possible. Otherwise, the device may not be able to work or animal information may be leaked. WPA2-Enterprise and a long password are recommended.
- Keep network authentication information, for example password, from being accessed by unauthorized users.
- Do not connect non-medical devices in this device network.
- If wireless network signal is poor, there may be a risk of CMS data loss.
- Maximum number of devices connected to a single AP is 16. Too many devices connected to the same AP may result in network disconnection.
- RF interference may result in wireless network disconnection.
- Disconnecting from the network may result in CMS data loss and function failure. Check the animal in case of network disconnection and reconnect the network as soon as possible. If disconnection is found, check the animal and solve the disconnection problem as soon as possible.

- Ensure that the device IP address setting is correct. Changing the network settings may result in network disconnection. Contact the Customer Service Department or your local distributor if you have any problems on setting the IP address.

18.3 Connecting to the CMS

TIP

The user name and password are not required for the local CMS.

You can obtain the user name, password and sever address of the cloud CMS through the following methods:

- See the accompanying installation package of cloud CMS.
- Contact the Customer Service Department or your distributor.

You can connect the device to the Central Monitoring System (CMS) through wired LAN or wireless LAN. When connected to the CMS, the device provides the following function:

- The device can transmit parameter values, waveforms, alarm settings, and events to the CMS. From the CMS, you can check the animal's monitoring data and alarms.
- Animal information, alarm settings, and alarm status can be synchronized between the device and the CMS.
- You can start or stop NIBP measurements from the CMS.
- In case of network disconnection, the device can transmit the off-line data to the CMS when network is reconnected.

18.3.1 Connecting to the CMS through Wired Network

To connect the device to the CMS, set that the device and the CMS are on the same network segment when the device is connected to the CMS through wired network.

Perform the following procedure:

1. Use a network cable to connect the device to the LAN where the CMS resides.
2. Perform the network settings on the device:
   1. On the main screen, tap the patient information area to enter the **Patient** detail screen.
   2. Select the **System** tab, and then select **General Maintenance**.
   3. Input the required password, and then tap ↵.
   4. Select **Network Setup** > **Network Type** > **LAN1 IP**:
   5. On the **LAN1 IP** tab page, tap **Obtain IP Address Automatically** or set the network information manually.
   6. On the **Central Station Setup** tab page, switch the **Select CMS** from ○ to ●.
   7. Select **Add Local CentralStation** to add the local central station or select **Add Cloud CentralStation** to add the cloud central station.
   8. Admit the device at the CMS.
      For detailed procedure, see the Operator's Manual of the CMS.

18.3.2 Connecting to the CMS through Wireless Network

When the device is connected to the CMS through wireless network, the device and CMS should use the same wireless network.

Perform the following procedure:

1. On the main screen, tap the patient information area to enter the **Patient** detail screen.
2. Select the **System** tab, and then select **General Maintenance**.
3. Input the required password, and then tap ↵.
4. Select **Network Setup** > **Network Type** > **WLAN**:
5. On the **WLAN** tab page, tap **Add WLAN** or set the network information manually.
6. On the **Central Station Setup** tab page, switch the **Select CMS** from to .
7. Select **Add Local CentralStation** to add the local central station or select **Add Cloud CentralStation** to add the cloud central station.
8. Admit the device at the CMS.

   For detailed procedure, see the Operator's Manual of the CMS.

18.4 Monitoring Animals via Video Through C-View

If the device is equipped with a built-in camera, you can monitor the animal via video through C-View.

For detailed procedure, see the Operator's Manual of the CMS.

19 Care and Cleaning

19.1 Overview

In this chapter we only describe cleaning and disinfection of the device and certain accessories. For the cleaning and disinfection of other reusable accessories, refer to their instructions for use.

19.2 Safety Information

WARNING

- Use only cleaners, disinfectants and methods specified in this chapter. Using unapproved substances or methods may damage the device and void the warranty.
- Do not mix disinfecting solutions, as hazardous gases may result.
- Mindray Animal Medical is not liable for the efficacy of the specified cleaners, disinfectants, or methods as a means for controlling infection. Refer to your hospital for infection controlling.
- The responsible hospital or institution shall carry out all cleaning and disinfection procedures specified in this chapter.

CAUTION

- Never immerse any part of the device or accessories in liquids or allow liquid to enter the interior.
- Any contact of cleaners or disinfectants with connectors or metal parts may cause corrosion.
- Do not pour or spray any liquid directly on the device or accessories or permit fluid to seep into connections or openings.
- If you spill the liquid on the instrument or accessories, disconnect the instrument from the power supply immediately, wipe off the liquid, and contact our customer service engineer or your distributor.
- Never use abrasive materials (such as steel wool or silver polish), or erosive cleaners (such as acetone or acetone-based cleaners).
- Dilute and use the cleaners or disinfectants according to the manufacturer's instructions.
- Check the device after cleaning and disinfecting. If there is any sign of damage, remove it from use.

- When performing care and cleaning, pay attention to prevent injury.

19.3 Cleaning and Disinfection the Device

CAUTION

- During the cleaning procedure, disable the touch operation by turning off the device or locking the touch screen.
- Any contact of cleaners or disinfectants with connectors or metal parts may cause corrosion.

NOTE

- Disinfect the device as required in your hospital's servicing schedule. Cleaning the device before disinfecting is recommended.
- Do not spray cleaner or disinfectant on the dust-proof mesh in the cabin.

The following table lists approved cleaners and disinfectants:

Type	Name	Applicable parts
Cleaners	Water	Device housing and interior
	Soap and water (pH value:7.0~10.5)	
Disinfections	75% ethanol	Device outer housing
	X5 disinfectant	Device inner housing
	Dupont Vecna	

19.3.1 Cleaning

The device should be cleaned regularly. In areas with severe environmental pollution or heavy wind and sand, the cleaning frequency should be increased. Before cleaning the device, consult your hospital's regulations for cleaning the device.

Perform the following procedure:

1. Dampen a soft lint-free cloth with water or ethanol (70%), and wring excess liquid from the cloth.
2. Wipe the screen and the outer housing of the device.

   When wiping, avoid the connectors and metal parts.
3. Dry the surface with a clean cloth. Allow the device air dry in a ventilated and cool place.

19.3.2 Disinfecting

Disinfect the device as required in your hospital's servicing schedule. Cleaning the device before disinfecting is recommended.

Always dilute and use disinfectants according to the manufacturer's instructions.

19.4 Cleaning the Water Tank

WARNING

Ensure that there is no patient inside the device before performing the operation.

NOTE

Recommended descaling solution: food-grade citric acid.

It is necessary to regularly remove water scale to ensure optimal performance of the humidification function.

- Enter **Environment Maintenance** > **Water Tank** menu, and follow the instructions on the screen to perform the descaling procedure.
- It is recommended to perform the descaling procedure every 6 months. You can adjust the interval based on your local water quality conditions.

19.5 Cleaning the Sponge Filter

WARNING

Ensure that there is no patient inside the device before performing the operation.

ViCare U7

Perform the following procedure:

1. Remove the CO_2 absorber canister:

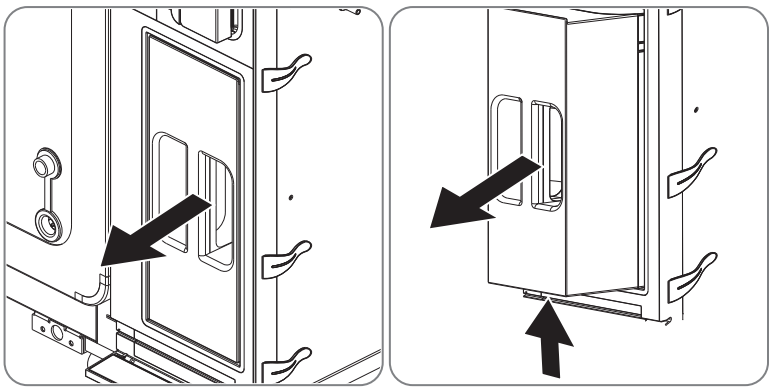

   1. Hold the handle of the CO_2 absorber canister and pull it out partially.
   2. Support the bottom of the CO_2 absorber canister and pull it out completely.

2. Remove the upper cover of the CO_2 absorber canister and take out all soda lime.

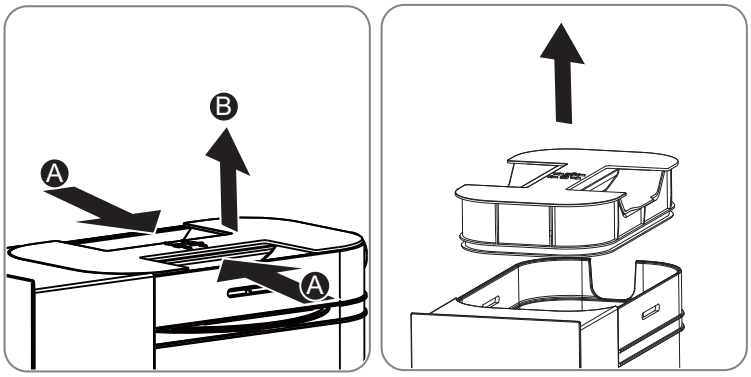

3. Take out the sponge filter.

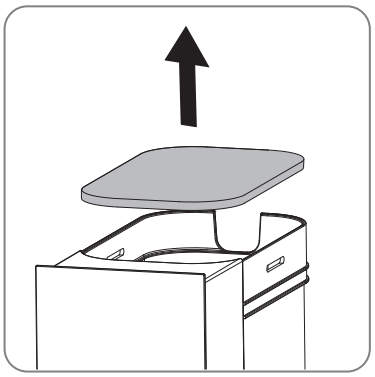

4. Use water or soft brush to clean the sponge filter. If necessary, replace the sponge filter.
5. Install the sponge filter in the reversed steps above after the cleaning.

ViCare U7R/ViCare U7L

Perform the following procedure:

1. Remove the CO_2 absorber canister:

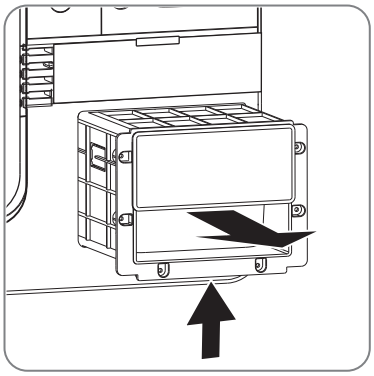

   1. Hold the handle of the CO_2 absorber canister and pull it out partially.
   2. Support the bottom of the CO_2 absorber canister and pull it out completely.

2. Remove the upper cover of the CO_2 absorber canister.

   1. Loosen the retaining ring on the upper cover of the CO_2 absorber canister.

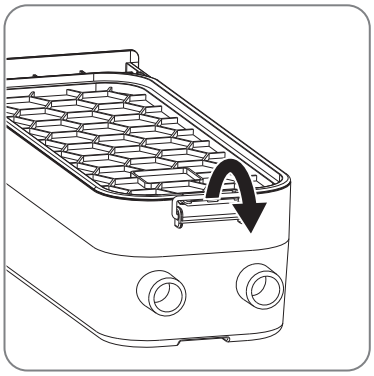

2. Remove the upper cover in the direction of the arrow.

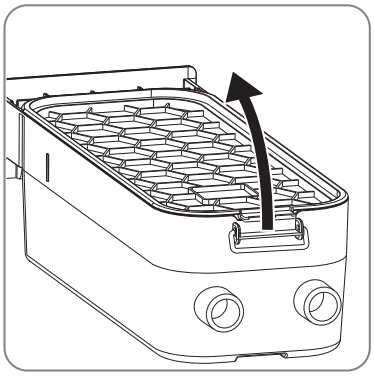

3. Take out all soda lime.

4. Take out the two sponge filters.

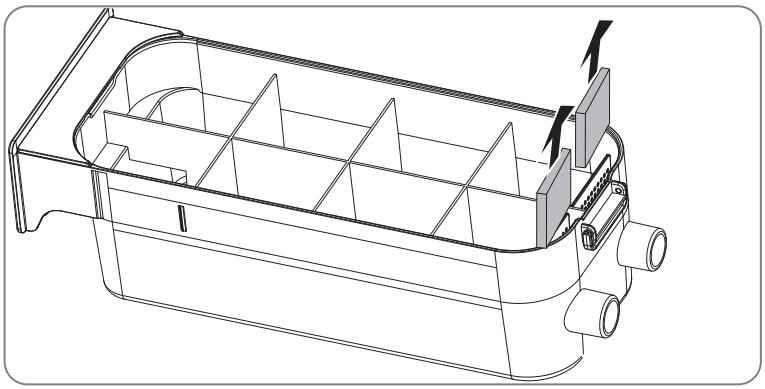

5. Use water or soft brush to clean the sponge filters. If necessary, replace the sponge filters.

6. Install the sponge filters in the reversed steps above after the cleaning.

19.6 Cleaning Dust-Proof Meshes and Filters

CAUTION

- Clean all dust-proof meshes and filters on a regular basis (once a month) to avoid damage. When using in dusty locations, increase the cleaning times.

- Ensure that there is no patient inside the device before performing the operation.

TIP

Dust-proof meshes are located in different positions based on the different models, but the cleaning procedures are the same.

Figure 19-1 Inner dust-proof meshes

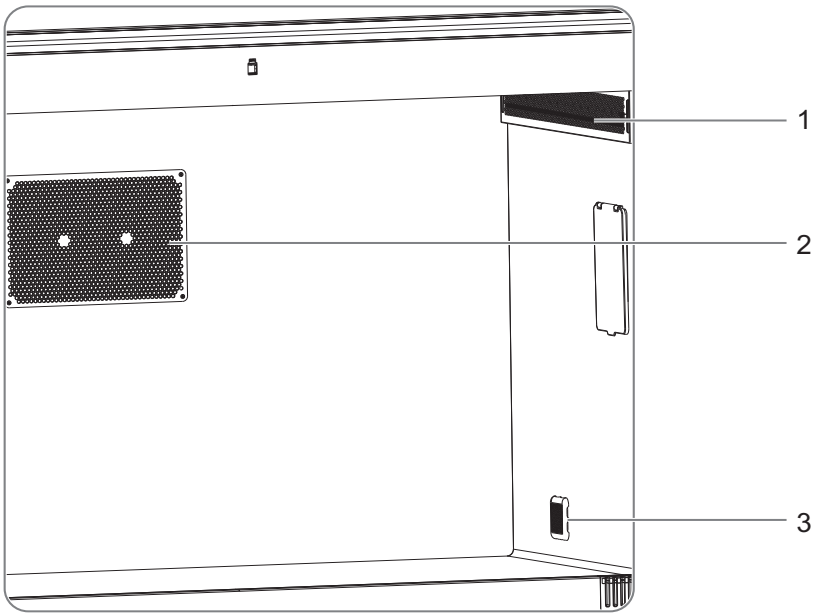

1.	**At Internal Circ. Duct**(Both sides)
2.	**At A/C 1**
3.	**At CO2 Duct**

Figure 19-2 Side filters

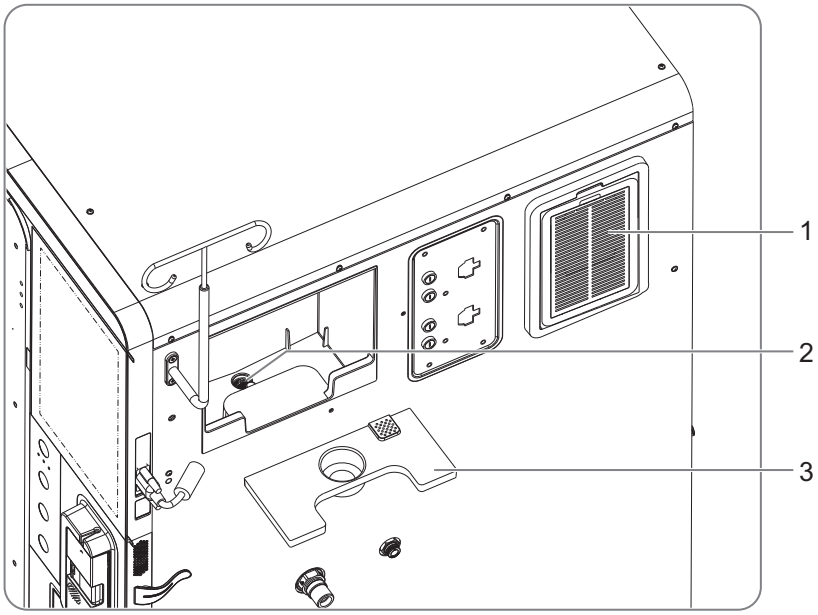

1.	**At Dehumidifier**
2.	Water tank filter
3.	Water tank bracket

Figure 19-3 Rear A/C dust-proof mesh

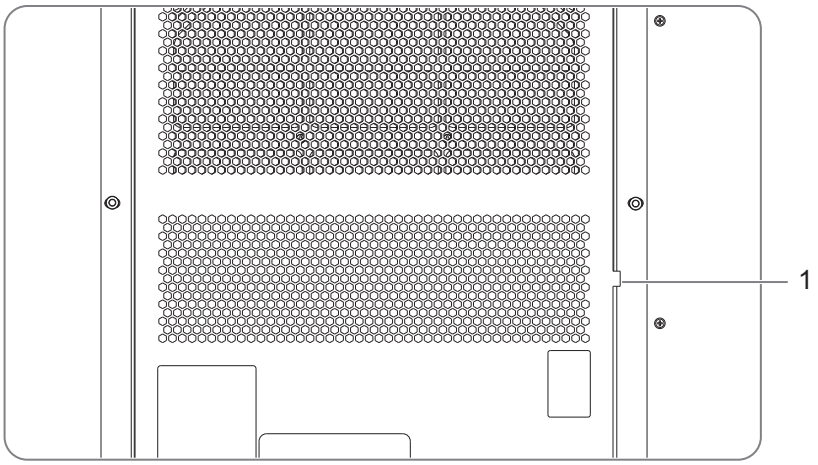

1.	Dust-proof mesh at the external circulation

At Internal Circ. Duct

Perform the following procedure:

1. Remove the dust-proof mesh:

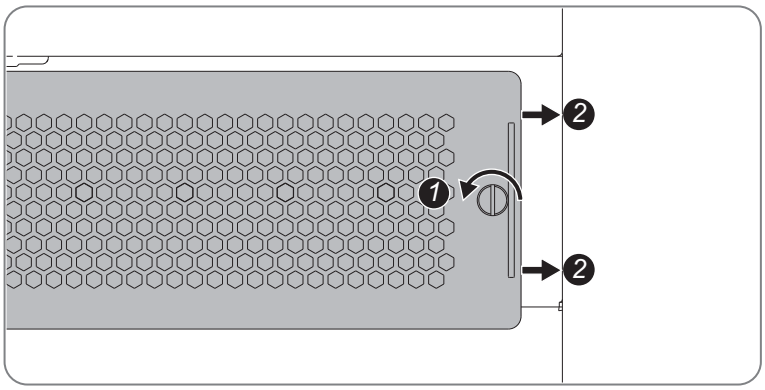

1. Loosen the retaining screw counterclockwise.

2. Drag the dust-proof mesh towards the cabin door to remove it.

2. Clean the dust-proof mesh. If necessary, replace the sponge filter.

3. Install the dust-proof mesh in the reversed steps above after the cleaning.

Dust-proof mesh at the external circulation

Perform the following procedure:

1. Remove the dust-proof mesh:

Hold the handle of the dust-proof mesh and pull it out horizontally towards the side of the touch screen.

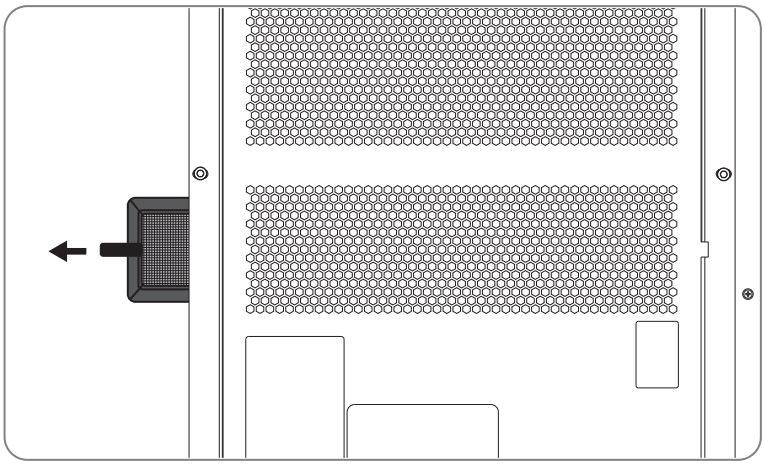

2. Clean the dust-proof mesh. If necessary, replace the dust-proof mesh.

3. Install the dust-proof mesh in the reversed steps above after the cleaning.

At CO2 Duct

Perform the following procedure:

1. Use a screwdriver to remove the retaining screws.

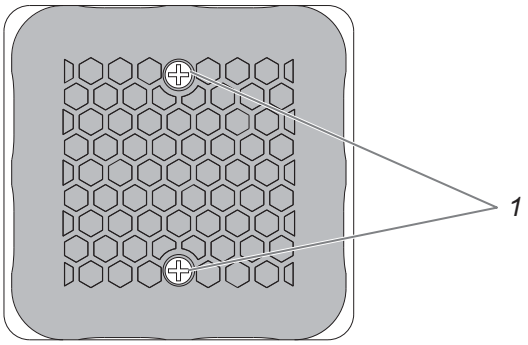

1.	Retaining screw (x2)

2. Clean the dust-proof mesh. If necessary, replace the sponge filter.
3. Install the dust-proof mesh in the reversed steps above after the cleaning.

At Dehumidifier

Perform the following procedure:

1. Press the buckle of the dust-proof mesh downwards, and turn the dust-proof mesh outward to remove it.

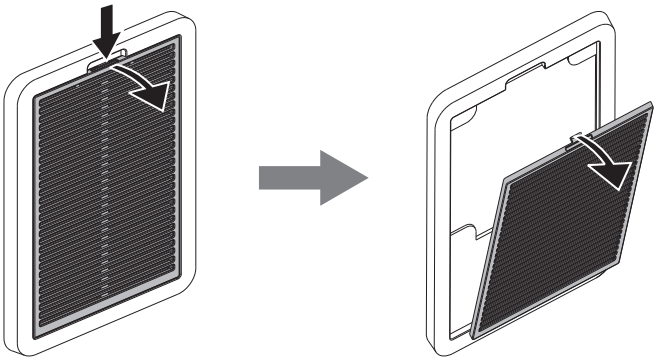

2. Use water or soft brush to clean the dust-proof mesh. If necessary, replace the sponge filter.
3. Install the dust-proof mesh in the reversed steps above after the cleaning.

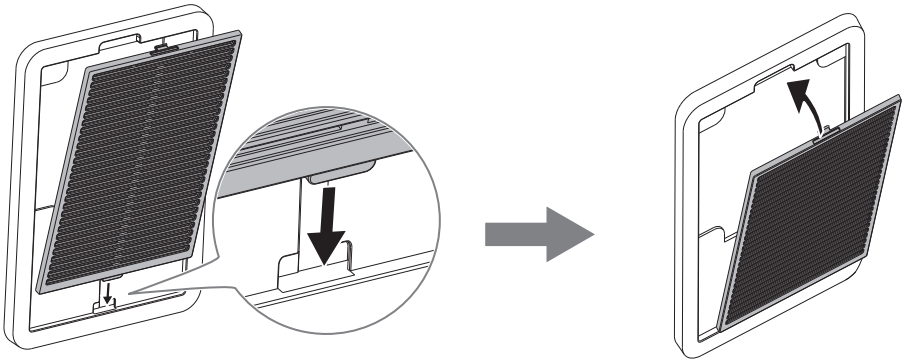

Water Tank Filter

Perform the following procedure:

1. Hold the water tank handle and lift it up, and then pull the water tank out horizontally.

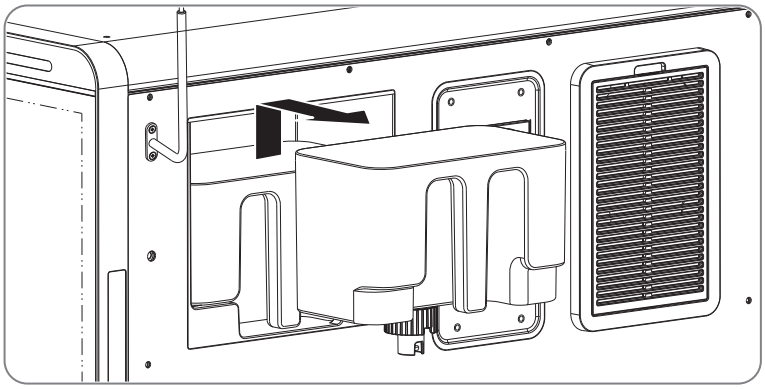

2. Follow the arrow direction below to remove the water tank bracket.

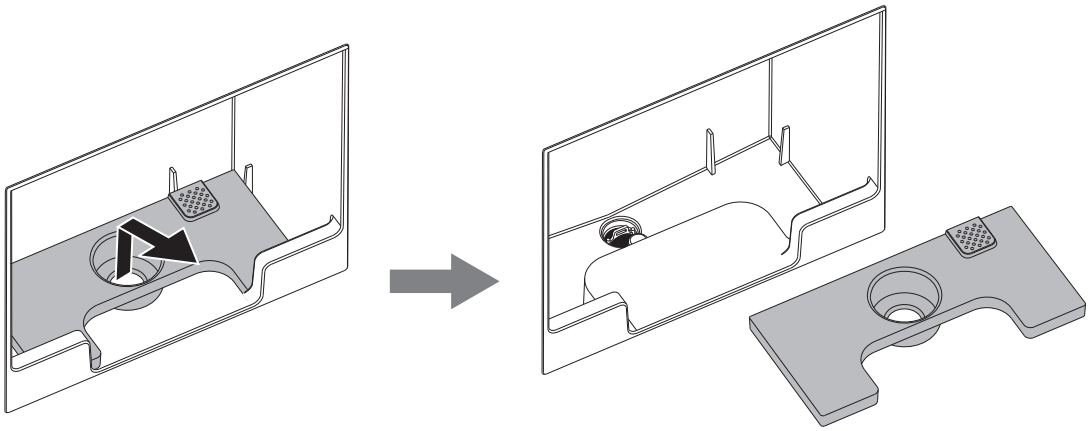

3. Pull the filter upwards to remove it.

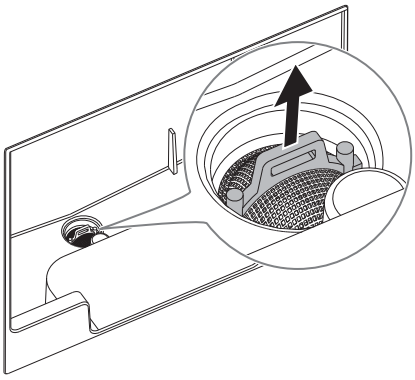

4. Use water or soft brush to clean the filter mesh.
5. Install the dust-proof mesh in the reversed steps above after the cleaning.

NOTE

Do not install the filter reversely.

At A/C 1 (Internal)

Perform the following procedure:

1. Use a screwdriver to remove the retaining screws.

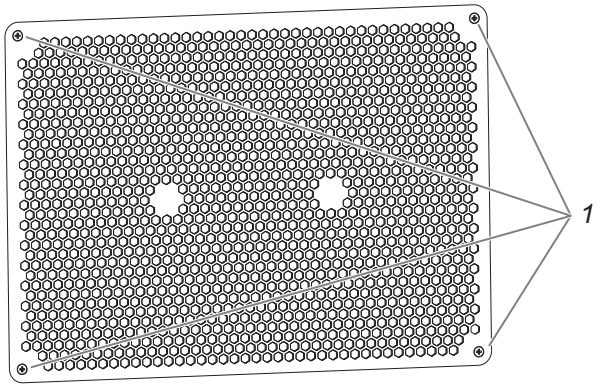

1.	Retaining screw (x4)

2. Use a screwdriver to remove the retaining screws of the sponge filter bracket, and then remove the sponge filter bracket and sponge filter in turn.

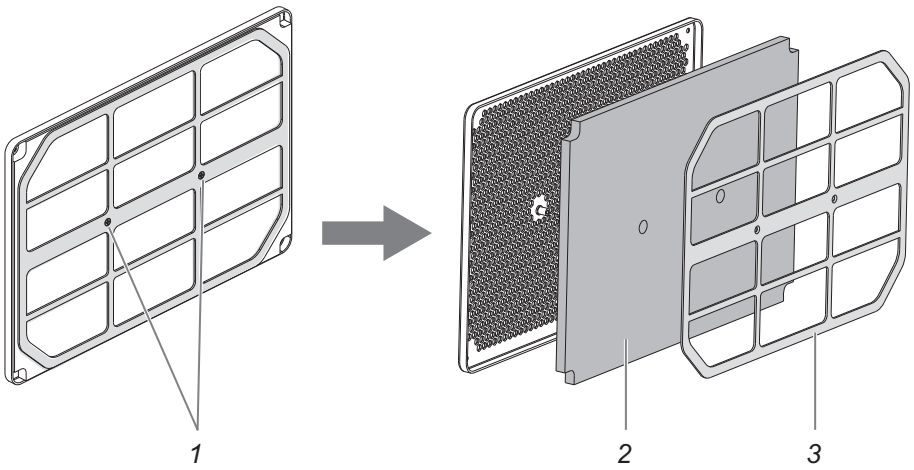

1.	Retaining screw (x2)
2.	Sponge filter
3.	Sponge filter bracket

3. Use water or soft brush to clean the dust-proof mesh. If necessary, replace the sponge filter.
4. Install the dust-proof mesh in the reversed steps above after the cleaning.

Front Dust-proof Mesh (ViCare U7L/ViCare U7R)

Perform the following procedure:

1. Use a screwdriver to press the buckle and pull the dust-proof mesh outward to remove it.

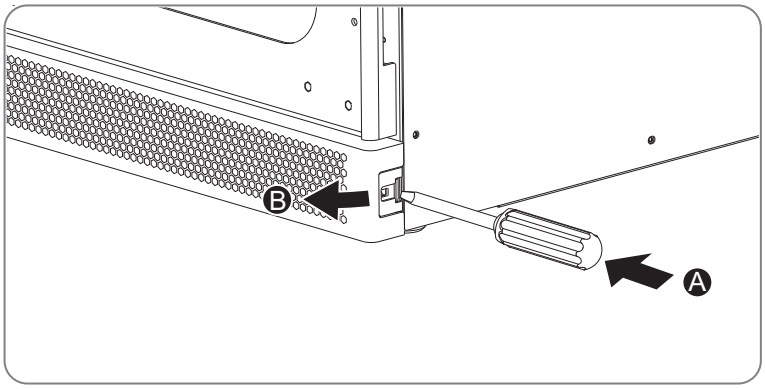

2. Use water or soft brush to clean the dust-proof mesh.

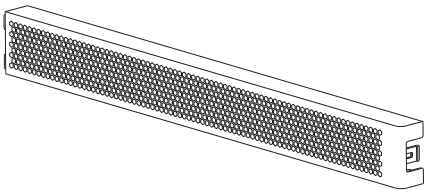

3. Restore the dust-proof mesh.

   Insert the tenons of the dust-proof mesh into the slot, press the other end to lock the dust-proof mesh in place.

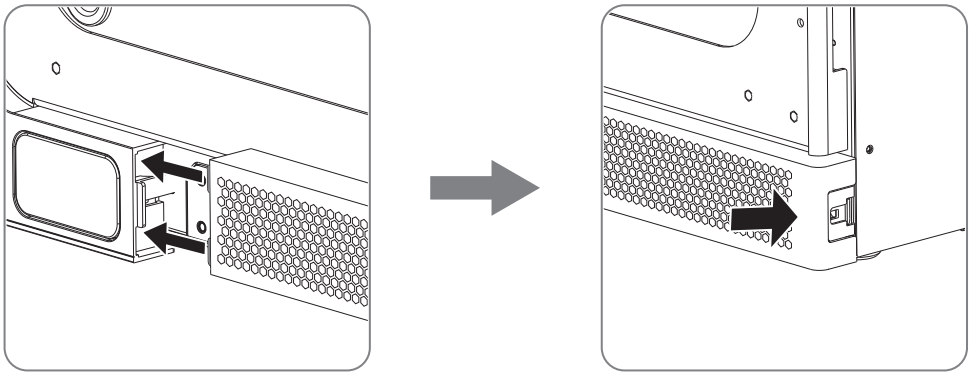

19.7 Cleaning and Disinfecting Accessories

CAUTION

- When cleaning or disinfecting the NIBP air hose, prevent liquid from entering the hose.
- Periodically inspect the NIBP air hose and connector for signs of wear or deterioration after cleaning or disinfecting the NIBP air hose. Replace the NIBP air hose if you detect a leak. Dispose of damaged NIBP air hose according to local laws for disposal of hospital waste.
- Never immerse or soak the accessories in any liquid.
- Never clean or disinfect the connectors and metal parts.
- Use only Mindray Animal Medical approved cleaners and disinfectants and methods listed in this section to clean or disinfect the accessories. Warranty does not cover damage caused by unapproved

substances or methods. To avoid long term damage, the accessories should be disinfected only when necessary as determined by your hospital's policy.

Clean and disinfect the NIBP hose using the methods recommended in this section. For other accessories, you should consult the instructions delivered with the accessories.

19.7.1 Cleaning

You should clean the NIBP hose on a regular basis. Before cleaning, consult your hospital's regulations.

Perform the following procedure:

1. Clean the accessories with a soft cloth moistened with water or ethanol (70%).
2. Wipe off all the cleaner residue with a dry cloth.
3. Allow the accessories to air dry.

19.7.2 Disinfecting

We recommend that the NIBP hose should be disinfected only when necessary as determined by your hospital's policy. Cleaning the NIBP hose before disinfecting is recommended.

Disinfectants for the NIBP Air Hose

The following table lists approved disinfectants for the NIBP air hose:

Name	Type	Manufacturer
Ethanol, 70%	Liquid	/
Isopropanol, 70%	Liquid	/
Glutaraldehyde, 2%	Liquid	/

19.8 Cleaning and Disinfecting Wireless Modules and Chargers

19.8.1 Cleaning Wireless Modules

CAUTION

Any contact of cleaners or disinfectants with connectors or metal parts may cause corrosion. If necessary, you can clean the connectors and metal parts with a soft cloth moistened with water or ethanol.

Perform the following procedure:

1. Remove the sensor, electrode pads and NIBP cuff from the animal.

2. Remove the wireless modules.
3. Dampen a soft lint-free cloth with water or ethanol (70%), and wring excess liquid from the cloth.
4. Wipe the display screens of the SpO_2 module and NIBP module.
5. Wipe the outer surface of the wireless modules and all accessories.

   When wiping, avoid the connectors and metal parts.
6. Dry the surface with a clean cloth. Allow the device air dry in a ventilated and cool place.

19.8.2 Cleaning the Chargers

WARNING

Disconnect the chargers from the power supply before cleaning.

Perform the following procedure:

1. Disconnect the chargers from the power supply. Take out the wireless modules or batteries of the NIBP module from the charging slots.
2. Dampen a soft lint-free cloth with water or ethanol (70%), and wring excess liquid from the cloth.
3. When wiping, avoid the connectors and metal parts.
4. Dry the surface with a clean cloth. Allow the device air dry in a ventilated and cool place.

19.8.3 Cleaning the Receiver

Perform the following procedure:

1. Remove the receiver from the module slot of the device.
2. Dampen a soft lint-free cloth with water or ethanol (70%), and wring excess liquid from the cloth.
3. Wipe the outer surface of the receiver.

   When wiping, avoid the connectors and metal parts.
4. Dry the surface with a clean cloth. Allow the device air dry in a ventilated and cool place.

19.8.4 Disinfecting

Disinfect wireless modules, chargers and accessories as required in your hospital’s servicing schedule. Cleaning before disinfecting is recommended. Always dilute and use disinfectants according to the manufacturer's instructions.

Approved disinfectants

Table 19-1 Disinfectants for SpO_2 module, ECG module, NIBP module, and receiver

Name	Type	Manufacturer
1-Propanol, 50%	Liquid	/
Alpet® D2 Surface Sanitizing Wipes	Wipes	BEST SANITIZERS INC™.
CIDEXR OPA Solution	Liquid	Gilag GmbH International Advanced Sterilization products
Clorox Dispatch® Hospital Cleaner Disinfectant Towels with Bleach	Wipes	CClorox professional products company
Clorox Healthcare®Bleach germicidal wipe	Wipes	CClorox professional products company
Clorox Healthcare® Hydrogen Peroxide Cleaner Disinfectant Wipes	Wipes	Clorox professional products company
Diversey Oxivir® TB Wipes	Wipes	Diversey Inc
Hydrogen peroxide, 3%	Liquid	/
Isopropanol, 70%	Liquid	/
Metrex CaviCide1™	Liquid, spray	METERX® RESEARCH
Metrex CaviWipes™	Wipes	METERX® RESEARCH
PDI Sani-Cloth® AF3 Germicidal Disposable Wipe	Wipes	PDI Inc.
PDI Sani-Cloth® Bleach Germicidal Disposable Wipe	Wipes	PDI Inc.
PDI Sani-Cloth® HB Germicidal Disposable Wipe	Wipes	PDI Inc.
PDI Sani-Cloth® Plus Germicidal Disposable Cloth	Wipes	PDI Inc.
PDI Super Sani-Cloth® Germicidal Disposable Wipe	Wipes	PDI Inc.
Perform® Classic Concentrate OXY, 0.5%	Powder	Schülke & Mayr GmbH
Rely+On™ Virkon® High Level surface Disinfectant, 1%	Powder	Antec International Ltd
Sodium hypochlorite bleach, 0.5%	Liquid	/
Virex® II 256 (1:256)	Liquid	Diversey Inc
Virex® TB	Liquid, spray	Diversey Inc
HEALTH ESSENCE Disinfecting Effervescent Tablets	Tablet	Beijing ChangJiangMai Medical Science Technology Co. Ltd
Environmental Surface of Health Essence brand Disinfectant	Liquid, spray	Beijing ChangJiangMai Medical Science Technology Co. Ltd
JIAN ZHI SU Disinfectant, Double-chain Quaternary Ammonium	Liquid	Beijing ChangJiangMai Medical Science Technology Co. Ltd

Table 19-1 Disinfectants for SpO_2 module, ECG module, NIBP module, and receiver

Name	Type	Manufacturer
DIAN'ERKANG® Surface Wipes	Wipes	Shanghai Likang Disinfectant Hi-Tech Co., Ltd
DIAN'ERKANG® Surface Disinfectant	Liquid	Shanghai Likang Disinfectant Hi-Tech Co., Ltd
DIAN'ERKANG® Disinfectant Spray	Liquid, spray	Shanghai Likang Disinfectant Hi-Tech Co., Ltd
Clinell® Universal Wipes	Wipes	GAMA Healthcare Ltd
Clinell ® Sporicidal Wipes	Wipes	GAMA Healthcare Ltd
Tristel Duo™	Liquid, foam	Tristel solutions Limited
Tristel Jet	Liquid, spray	Tristel solutions Limited
Tristel Fuse For Surfaces, 196ppm	Liquid	Tristel solutions Limited
Surfanios Premium, 0.25%	Liquid	ANIOS LABORATORIES
Surfa 'safe	Liquid, spray	ANIOS LABORATORIES
Wip' Anios premium	Wipes	ANIOS LABORATORIES
Aniosurf ND premium, 0.25%	Liquid	ANIOS LABORATORIES
Mikrobac® Tissues	Wipes	BODE Chemie GmbH
Cleanisept® Wipes	Wipes	Dr. Schumacher GmbH
mikrozid® PAA Wipes	Wipes	Schülke & Mayr GmbH
mikrozid® Sensitive Wipes	Wipes	Schülke & Mayr GmbH
Ethanol, 70%	Liquid	/
Glutaraldehyde, 2%	Liquid	/
Ecolab Incidin® OxyWipe S.	Wipes	Ecolab Deutschland GmbH
Descosept® forte	Liquid	Dr. Schumacher GmbH
Descosept® AF	Liquid	Dr. Schumacher GmbH
Dismozon® plus, 0.4%	Powder	BODE Chemie GmbH
mikrozid® AF Wipes	Wipes	Schülke & Mayr GmbH
Terralin® Liquid	Liquid	Schülke & Mayr GmbH

Table 19-2 Disinfectants for the Temp module

Name	Type	Manufacturer
Ethanol, 75%	Liquid	/
Isopropanol, 70%	Liquid	/
Soap and water	Liquid	/
X5 disinfectant	Liquid	/
Dupont Vecna	Liquid	Antec International Ltd

Table 19-3 Disinfectants for chargers

Name	Type	Manufacturer
Ethanol, 70%	Liquid	/
1-Propanol, 50%	Liquid	/
Isopropanol, 70%	Liquid	/
Sodium hypochlorite bleach, 0.5%	Liquid	/
Hydrogen peroxide, 3%	Liquid	/
Rely+On™ Virkon® High Level surface Disinfectant, 1%	Powder	Antec International Ltd
Descosept® forte	Liquid	Dr. Schumacher GmbH
Dismozon® plus, 0.4%	Powder	BODE Chemie GmbH
mikrozid® AF Wipes	Wipes	Schülke & Mayr GmbH
Terralin® Liquid	Liquid	Schülke & Mayr GmbH
Perform® Classic Concentrate OXY, 0.5%	Powder	Schülke & Mayr GmbH

19.9 Sterilization

Do not sterilize the device, accessories, or supplies unless otherwise specified in the instructions for use delivered with the accessories and supplies.

19.10 Impact of Improper Cleaning

Using cleaners other than those recommended may have the following impact:

- Product discoloration
- Metal part corrosion
- Brittle and breaking wires, connectors, and device housing
- Reduced cable and leadwire life
- Overall system performance degradation
- Device malfunction or failure

20 Maintenance

20.1 Overview

Regular maintenance is essential to ensure that the device functions properly. This chapter contains information on periodic testing and maintenance.

20.2 Safety Information

WARNING

- Follow the maintenance and testing schedule or local regulations to perform testing and maintenance. Not implementing the maintenance schedule may cause device failure and possible health hazards.
- No modification of this device is allowed.
- This device contains no user serviceable parts. If maintenance is required, contact the Customer Service Department or your distributor.
- The safety checks or maintenance involving any disassembly of the device should be performed by professional service personnel. Otherwise, undue device failure and possible health hazards could result.
- Do not open batteries, heat batteries to above 60 °C, incinerate batteries, or short the battery terminals. Batteries may ignite, explode, leak or heat up, causing personal injury.
- The service personnel must be properly qualified and thoroughly familiar with the operation of the device.
- To avoid electric shock, stop using the pump if you find the housing of the pump has signs of broken. Contact the Customer Service Department or your distributor for help in that case.

CAUTION

- If a problem occurs to the device, contact the Customer Service Department or your local distributor.
- Use and store the device within the specified temperature, humidity, and elevation ranges.
- When disposing of the packaging material, be sure to observe the applicable waste control regulations and keep it out of children’s reach.

- At the end of its service life, the device, as well as its accessories, must be disposed of in compliance with the guidelines regulating the disposal of such products. If you have any questions concerning disposal of the device, contact the Customer Service Department or your local distributor.
- The device and its accessories shall not be served or maintained while in use with an animal.
- If you discover a problem with the device, such as the product label falls off or illegible, contact the Customer Service Department or your local distributor.

NOTE

If necessary, contact the Customer Service Department or your distributor for the circuit diagram, list of parts and calibration instructions of products or other information related to device maintenance.

20.3 Maintenance and Testing Schedule

Follow the maintenance and testing schedule or local regulations to perform testing and maintenance. Make sure to clean and disinfect the device before taking any tests and maintenance.

The following table lists the maintenance and testing schedule:

Test/Maintenance Item		Recommended Frequency
Performance Tests	Visual inspection	Every day, before first use.
	Measurement module performance test and calibration	• If you suspect that the measurement values are incorrect. • Follow any repairs or replacement of relevant module. • Once every 2 years for other parameter module performance tests.
	Analog output test	If you suspect that the analog output function does not work properly.
	Tests required by IEC 60601-2-24	• Once every 3 years. • When you suspect that the occlusion alarm is abnormal. • When you suspect that the rate is abnormal.
Electrical Safety Tests	Electrical safety tests required by IEC 60601-1	• When the power board is repaired or replaced. • When the main board is replaced, or the device drops to the ground. • Once every 3 years or as necessary.

Test/Maintenance Item		Recommended Frequency
Other Tests	Power-on test	Before use.
	Network printer tests	• When first installed. • Follow any repair or replacement of the printer.
	Battery check for wireless monitoring modules	Functionality test: • When first installed. • When battery is replaced.
		Every three months or if the battery runtime reduced significantly.
	Pressure calibration, and accuracy calibration, see the service manual.	If the performance test fails.
Oxygen sensor calibration	Oxygen concentration sensor	Once every year or as necessary
	CO_2 concentration sensor	Every month or as necessary
On-demand	Soda lime in the canister	If the soda lime color changes, replace the soda lime in the canister.
	Gas supply hose	Replace the delivered gas hose if it is damaged.
	Hose assembly for oxygen	Replace the oxygen supply hose if it is damaged.

20.4 Testing Methods and Procedures

Except the following maintenance tasks, all other test and maintenance tasks should be performed by Mindray Animal Medical-qualified service personnel only.

- Regular check, including visual inspection and power-on test
- Printer and recorder tests
- Battery check

If your device needs a safety test and performance test, contact the Customer Service Department or your local distributor.

20.4.1 Performing Visual Inspection

Visually inspect the device before its first used every day. If you find any signs of damage, remove the device from use and contact the Customer Service Department or your local distributor.

Verify that the device meets the following requirements:

- Environment and power supply specifications are met.
- The device housing and display screen are free from cracks or other damages.
- The power cord is not damaged and the insulation is in good condition.
- Connectors, plugs, and cables are not damaged and kinked.
- Power cord and other cables are securely connected with the device and modules.

20.4.2 Performing Power-on Test

The device automatically performs a selftest at startup.

Check the following items for the power-on test:

- The device powers on properly.
- The alarm system works properly.
- The device displays properly.

20.4.3 Testing the Network Printer

To check the printer, follow this procedure:

1. Start a printing task to print waveforms and reports.
2. Check that the printer is properly connected and functions correctly.
3. Check that the printout is clear without missing dots.

20.4.4 Maintaining the Battery

NOTE

- Do not use the device to the animal during battery conditioning.
- Do not interrupt battery conditioning.
- If the battery is not conditioned for a prolonged time, its charge indication may not be accurate and you may wrongly evaluate the remaining battery runtime.
- Perform the battery performance check as described in this section. The operating time of the battery reflects their performance directly. If the operating time of a battery is noticeably shorter than that stated in the specifications, the battery may reach its service life or malfunction, contact the Customer Service Department or your local distributor.
- You should check the battery performance every three months or if you doubt that the battery may fail.
- The stored batteries should also be conditioned periodically.
- You should check the battery performance if you doubt that the battery may fail.

For detailed information about battery conditioning, contact the Customer Service Department or your distributor.

Recycling Batteries

Discard a battery in the following situations:

- The battery has visual signs of damage.
- The battery fails.
- The battery is aged and its runtime significantly less than the specification.
- The battery service life is reached.

Properly dispose of batteries according to local regulations.

20.5 Disposing of the device

WARNING

Unless otherwise specified, dispose of parts and accessories in accordance with local regulations regarding disposal of hospital waste.

Dispose of the device and its accessories when its service life is reached. Follow local regulations regarding the disposal of such product.

A Accessories

The accessories listed in this chapter comply with the requirements of IEC 60601-1-2 when in use with this device. For detailed information about accessories, see the related instructions.

WARNING

- Use accessories specified in this manual. Using other accessories may cause damage to the device or not meet the claimed specifications.
- The listed accessories must be used together with the specified device. Before usage, read the operator's manual of the device (including accessories) or contact the Customer Service Department or your local distributor to ensure that the accessories and the device can be safely used together. Otherwise, the animal may be injured.
- Single use accessories are not designed to be reused. Reuse may cause a risk of contamination and affect the measurement accuracy.

CAUTION

- The accessories may not meet the performance specifications if stored or used outside the specified temperature and humidity ranges. If accessory performance is degraded due to aging or environmental conditions, contact the Customer Service Department or your local distributor.
- Check the accessories and their packages for any sign of damage. Do not use them if any damage is detected.
- Use the accessories before the expiry date if their expiry date is indicated.
- The disposable accessories shall be disposed of according to hospital's regulations.

NOTE

- For accessories with a safe service life, see the accessory package.
- For sterilization accessories, see the accessory package.

A.1 ECG Accessories

Name	Model	Description	Type
Trunk cable	EA6433B	3-lead ECG cable, AHA, Snap	Reusable
	EA6434B	3-lead ECG cable, IEC, Snap	Reusable
ECG electrodes	EB6903	Alligator Clip, Vet	Reusable
	H124SG	ECG Electrode	Disposable

A.2 SpO_2 Accessories

Wavelength emitted by the sensors is between 600 nm and 1000 nm. The maximum photic output consumption of the sensor is less than 18 mW.

The information about the wavelength range and maximum photic output consumption can be especially useful to clinicians, for example, when photodynamic therapy is performed.

Name	Model	Description	Type
SpO_2 sensor	553V	Veterinary SpO_2 Sensor (Reusable, Wrap)	Reusable
	551B	Veterinary SpO_2 Sensor (Reusable, 2-Clips)	Reusable

A.3 NIBP Accessories

Name	Model	Description	Type
NIBP hoses	CMA94 Vet	NIBP hoses	Reusable

Name	Model	Description	Type
NIBP cuff	CMA01 Vet	NIBP Cuff 1#, Vet (CMA01 Vet, 3.1-5.7cm)	Disposable
	CMA02 Vet	NIBP Cuff 2#, Vet (CMA02 Vet, 4.3-8.0 cm)	
	CMA03 Vet	NIBP Cuff 3#, Vet (CMA03 Vet, 5.8-10.9 cm)	
	CMA04 Vet	NIBP Cuff 4#, Vet (CMA04 Vet, 7.1-13.1cm)	
	CMA05 Vet	NIBP Cuff 5#, Vet (CMA05 Vet, 8-15cm)	
	CMA06 Vet	NIBP Cuff 6#, Vet (CMA06 Vet, 10-17cm)	
NIBP cuff	CMA11 Vet	NIBP Cuff 1#, Vet (CMA11 Vet, 15-20 cm)	Reusable
	CMA12 Vet	NIBP Cuff 2#, Vet (CMA12 Vet, 19-25 cm)	
	CMA13 Vet	NIBP Cuff 3#, Vet (CMA13 Vet, 24-32 cm)	
	CMA14 Vet	NIBP Cuff 4#, Vet (CMA14 Vet, 32-42 cm)	
	CMA15 Vet	NIBP Cuff 5#, Vet (CMA15 Vet, 42-50 cm)	

A.4 Temp Accessories

Name	Model	Description	Type
Temperature probe	MRA405V	Reusable Temp Probe, 0.5 m, Vet	Reusable

A.5 Wireless Monitoring Modules

Name	Model	Description
SpO_2 module	MAS30	Used for ECG, HR, Resp, Temp, SpO_2, and PR monitoring
Temp module	MAT30	
ECG module	MAE30	
NIBP module	MAB30	Used for NIBP measurement

Name	Model	Description
Receiver module	R20	Receives the monitoring data and transmits to the device
Chargers	C10	Used for charging the battery of the NIBP module
	C25	Used for charging the built-in batteries of the SpO_2 module and ECG module

A.6 Other Accessories

No.	Description
1.	C10 charger
2.	Protective pouch for SpO_2 module
3.	Protective pouch for ECG module
4.	Oxygen source hose material pack
5.	Hose assembly for oxygen
6.	Curtains
7.	Vet Harness for ICU
8.	Portable storage bag for wireless monitoring modules
9.	Nebulizer Cup Set, 8ml
10.	NIBP module rear panel
11.	8 Inch IV stand arm
12.	32A Leakage current breaker
13.	USB Flash Drive 32GB USB3.0

B Product Specifications

B.1 Safety Specifications

Type of protection against electrical shock	Class I
Degree of protection against electrical shock	Type CF defibrillation proof for ECG, TEMP, SpO_2, NIBP Type BF defibrillation proof for others
Degree of protection against harmful ingress of water	Main unit: IPX0
According to the disinfection and sterilization method(s) recommended by manufacturer	The devices recommended by the manufacturer
Degree of safety of application in the presence of flammable anesthetic mixture with air or with oxygen or nitrous oxide	The device is not suitable for use in the presence of a flammable anesthetic mixture with air or with oxygen or nitrous oxide
Mode of operation	Continuous
The device equipped with the applied part of defibrillation protection	Yes
Permanently installed or non-permanently installed	Permanently installed
According to the installation and use	Fixed device

B.2 Environmental Specifications

CAUTION

The device may not meet the performance specifications if stored or used outside the specified temperature and humidity ranges. If the performance of the device is degraded due to aging or environmental conditions, contact the Customer Service Department or your local distributor.

NOTE

The environmental specifications of unspecified parameter modules are the same as those of the main unit.

Main Unit

Item	Temperature	Relative humidity (no condensation)	Atmospheric pressure
Operating condition	10℃ to +35℃	30% to 95%	525 mmHg to 805.5 mmHg (70.0 kPa to 107.4 kPa)
Storage Condition	-20℃ to +60℃	10% to 95%	120 mmHg to 805.5 mmHg (16.0 kPa to 107.4 kPa)

Wireless Monitoring Modules

The wireless monitoring modules include the SpO_2 module, Temp module, ECG module and NIBP module.

Item	Temperature	Relative humidity (no condensation)	Atmospheric pressure
Operating condition	0℃ to +40℃	15% to 95%	427.5 mmHg to 805.5 mmHg (57.0 kPa to 107.4 kPa)
Storage Condition	-20℃ to +60℃	10% to 95%	120 mmHg to 805.5 mmHg (16.0 kPa to 107.4 kPa)

B.3 Main Unit

B.3.1 Power Supply Specifications

External Power Supply Specifications (ViCare U7)

Item	Description
Input voltage	200-240V AC
Input current	17A
Frequency	50/60Hz

External Power Supply Specifications (ViCare U7L/ViCare U7R)

Item	Description
Input voltage	200-240V AC
Input current	14.5A
Frequency	50/60Hz

B.3.2 Battery Specifications

Item	Description
Number of batteries	1
Battery type	Lithium battery
Rated battery voltage	10.95 V
Battery capacity	5000 mAh
Minimum battery run time	≥ 150 minutes (a new and fully-charged battery when working continuously at a temperature of 20℃±2℃, default brightness and volume, infusion pump flow rate is 25 ml/h)

B.3.3 AC Power Auxiliary Outputs

Item	Description
Input voltage	200V-240V AC
Input current	2A
Frequency	50/60Hz

B.3.4 Physical Specifications

ViCare U7

Item	Description
Dimensions (W x H x D)	Width ≥1200 mm, depth ≥600 mm, height ≥700 mm
Weight	200 kg

ViCare U7L/ViCare U7R

Item	Description
Dimensions (W x H x D)	Width ≥640 mm, depth ≥600 mm, height ≥500 mm
Weight	≤ 150 kg

B.3.5 Hardware Specifications

Display

Item	Description
Screen type	Color touchscreen
Screen Size	12.1 inches
Resolution	1280 pixels x 800 pixels

LEDs

Item	Description
Alarm lamp	1 or 2 (three color-coded: red, yellow, and cyan)
Power-on LED	1 (green)
AC power LED	1 (green)
Battery LED	1 (two color-coded: yellow and green)

Audio Indicator

Item	Description
Speaker	Give alarm tones (45 to 85 dB), reminder tones, key tones, QRS tones; support PITCH TONE and multi-level tone modulation. Alarm tones comply with IEC 60601-1-8.

Interface Specifications

Item	Description
AC Power Auxiliary Outputs	Alternative current auxiliary outputs (x2)
Network connector	1, standard RJ45 connectors, 100 Base-TX, IEEE 802.3
USB connector	2, USB 2.0
Multifunctional connector	1
Video output connector	1, 15-pin D-sub

B.3.6 Data Storage

Item	Description
Trends	Internal card: • Up to 120 hours of trend data with the resolution no less than 1 minute • Up to 4 hours of trend data with the resolution no less than 5 seconds
	External card: Up to 120 hours of trend data with the resolution no less than 1 minute
Events	• Internal card: 1000 events • External card: 5000 events • 128 arrhythmia events
NIBP measurements	• Internal card: 1600 sets • External card: 5000 sets
Full-disclosure waveforms	Up to 48 hours for one waveform.
ST view	At least 120 hours of ST segment waveforms. One group of ST segment waveforms is stored every 5 minutes.

B.3.7 Wi-Fi Specifications

Wi-Fi Technical Specifications

Item	Description
Protocol	IEEE 802.11a/b/g/n/ac
Modulation mode	BPSK, QPSK, 16QAM, 64QAM, 256QAM
Operating frequency	2412 MHz to 2472 MHz 5180 MHz to 5320 MHz 5500 MHz to 5700 MHz 5745 MHz to 5825 MHz
Wireless data rate	IEEE 802.11a: 6 Mbps to 54 Mbps IEEE 802.11b: 1 Mbps to 11 Mbps IEEE 802.11g: 6 Mbps to 54 Mbps IEEE 802.11n: MCS0 - MCS7 IEEE 802.11ac: MCS0 - MCS8
Output power	< 20dBm (CE requirements, detection mode: RMS) < 30dBm (FCC requirements, detection mode: peak power)
Operating mode	As station, access AP for data transmission

Item	Description
Data security	Standards: WPA-PSK, WPA2-PSK, WPA-Enterprise, WPA2-Enterprise EAP method: EAP-FAST, EAP-TLS, EAP-TTLS, PEAP-GTC, PEAP-MSCHAPv2, PEAP-TLS, LEAP Encryption: TKIP, AES

Wi-Fi Performance Specifications

WARNING

Do perform all network functions of data communication within an enclosed network.

- System Capacity and Resistance to Wireless Interference

  All the devices do not encounter communication loss and meet the following requirements:
  - The total delay of data transmission from the device to the CMS: ≤ 2 seconds.
  - The delay for device-related settings configured at the CMS to be effective: ≤ 2 seconds.
  - The total delay of data transmission from one device to the other: ≤ 2 seconds.
  - The delay for the device to reset alarms of another to be effective: ≤ 2 seconds.

  Testing conditions are as follows:
  - Number of the devices supported by a single AP: ≤ 16.
  - Each device can communicate with the CMS.
  - Only one device can transmit history data.
  - The worst AP Signal Level value of the device is not less than -65 dBm.
  - The distance between the interfering equipment and this device is greater than 20 cm. A Wi-Fi interference (no greater than -85 dBm) in the same channel and a Wi-Fi interference (no greater than -50 dBm) in an adjacent-channel are presented synchronously. The interfering devices include, but are not limited to, 2.4G wireless devices, cellular mobile networks, microwave ovens, interphones, cordless phones, and ESU equipment. The interfering devices do not include Wi-Fi devices.
- Wi-Fi Network Stability

  The ratio of the communication data loss on the CMS from any device does not exceed 0.1% over a 24-hour period.

  Testing conditions are as follows:
  - Number of the devices supported by a single AP: ≤ 16.
  - Each device can communicate with the CMS.
  - Only one device can transmit history data.
  - The weakest strength of the AP signal where the device is located cannot be less than -65 dBm.
- Distinct Vision Distance

  The distinct vision distance between the device and the AP is no less than to 50 meters.

B.4 Wireless Monitoring Modules

B.4.1 Power Supply Specifications

SpO_2 Module (MAS30) Battery

Item	Description
Battery type	Rechargeable lithium-Ion battery, model LI21S001G
Run time	At least 36 hours with a new and fully-charged battery when working continuously at a temperature of 25±5°C and at the following conditions: SpO_2 module is connected with the Temp module, and paired with an ECG module that is connected with an ECG lead; the beeper is not beeping; the screen is resting; the SpO_2 module is in Bluetooth connection with an wireless receiver and works under Wireless Monitoring mode At least 72 hours with a new and fully-charged battery when working at 25ºC±5ºC and at the following conditions: SpO_2 module is connected with the Temp module, and paired with an ECG module that is connected with an ECG lead
Charge time	< 3 hours to 90% at 20ºC±5ºC
Shutdown delay	At least 30 minutes after the low battery indication first occurs

Temp Module (MAT30) Battery

Item	Description
Battery type	CR2032 coin battery
Run time	At least 200 hours with a new coin battery

ECG Module (MAE30) Battery

Item	Description
Battery type	Rechargeable lithium-Ion battery, model LI11S001G
Run time	At least 72 hours with a new and fully-charged battery when working at 25ºC±5ºC, with an ECG lead connected, and sending data continuously to the SpO_2 module
Charge time	< 3 hours to 90% at 20ºC±5ºC
Shutdown delay	At least 30 minutes after the low battery indication first occurs on SpO_2 module

SpO_2 Module (MAB30) Battery

Item	Description
Battery type	Rechargeable lithium-Ion battery, model LP11I001E
Run time	At least 600 NIBP measurements, when the NIBP module is powered by a new fully-charged battery at 25ºC±5ºC
Charge time	< 5 hours to 90% at 25ºC±5ºC
Shutdown delay	At least 30 minutes after the low battery indication first occurs

C10 Charger

Item	Description
Input voltage	100-240V AC (±10%)
Input current	0.6A-0.3A
Frequency	50/60 Hz (±3 Hz)
Overcharge protection	The charger stops charging automatically after the battery is fully charged

Specification of C25 Charger

Item	Description
Input voltage	4.5V to 5.5V
Input current	0.7A
Output voltage	5V±5%

Receiver Module (R20)

The receiver is powered by the device after being properly installed to the module slot.

B.4.2 Physical Specifications

Module	Model	Weight	Dimensions (W x H x D)
SpO_2 module	MAS30	≤ 60 g	≤ 62mm x 50mm x 19mm
Temp module	MAT30	≤ 60 g	≤ 75mm x 50mm x 30mm
ECG module	MAE30	≤ 35 g	≤ 47mm x 47mm x 13mm
NIBP module	MAB30	≤ 165 g	≤ 119mm x60mmx 19 mm (excluding the air nozzle, back clip, and cuff accessories)
Receiver module	R20	≤ 250 g	≤ 150mm x 50mm x 120mm
Chargers	C10	≤ 1.5 kg	≤ 222 mm x 105mm x 68mm

Module	Model	Weight	Dimensions (W x H x D)
Chargers	C25	< 165g	≤154.5mm x 78mm x 26.5mm

B.4.3 Hardware Specifications

Display

Module	Item	Description
SpO_2 Module (MAS30)	Screen type	LCD TFT screen
	Screen size	1.54inches
	Resolution	240 pixels x 240 pixels
	Display	Supports the display of one waveform Supports multi-screen display, and press to switch the screen
NIBP Module (MAB30)	Screen type	Black and white, untouchable
	Screen size	2.4inches
	Resolution	208 pixels x 360 pixels

Interfaces

Item	Description
Power input	Charger: • C10: 1, AC power input • C25: 1, standard USB Type-C connector
Data transmission interfaces	Bluetooth, Wi-Fi and NFC interface

Data Storage

The SpO_2 module has the power-off storage function.

The SpO_2 module can store trend data of not less than 8 hours.

Signal Outputs

Alarm output (on the Device)

Item	Description
Inherent delay time for indicating the confirmed alarms	≤ 1s
Alarm delay time from the device to remote equipment	The alarm delay time from the device to remote equipment is ≤2 seconds, measured at the device signal output connector.
Alarm signal sound pressure level range	45 dB(A) to 85 dB(A) within a range of one meter

Audio Indicator

Item	Description
Audio signal	Key tone: 1000 Hz Pairing prompt tone: 4000 Hz

B.4.4 Wi-Fi Specifications

Wi-Fi Specifications (SpO_2 module)

Item	Description
Protocol	IEEE 802.11a/b/g/n
Operating frequency	2412 MHz to 2472 MHz 5180 MHz to 5320 MHz 5500 MHz to 5700 MHz 5745 MHz to 5825 MHz
Data security	Standards: WPA/WPA2-PSK, WPA/WPA2-Enterprise EAP Method EAP-TLS, PEAP-MsCHAPv2, EAP-TTLS
Encryption	TKIP and AES
Modulation mode	BPSK, QPSK, 16-QAM, 64-QAM
Transmission power	The average power is not greater than 20 dBm

WMTS Specifications (SpO_2 Module)

Item	Description
Protocol	Private protocol
Operating frequency	608 MHz to 630 MHz
Modulation mode	GFSK
Transmission power	≤ 10 dBm
Data security	Private protocol

Bluetooth Specifications

Item	Description
Protocol	• SpO_2/Temp module/ECG module/wireless receiving module: Support Bluetooth 5 • NIBP module: Bluetooth low energy 4.0
Operating frequency	2402 MHz to 2480 MHz
Modulation mode	GFSK
Transmission power	< 10 mW
Data security	Private protocol
Communication distance	• ECG module and SpO_2 module: no less than 1.5m (line of sight distance) • NIBP module and SpO_2 module: no less than 1.5m (line of sight distance) • Wireless receiver module and SpO_2 module: no less than 7m (line of sight distance)
Resistance to interference	In a range of 100 m2, there should be no more than 10 groups of paired SpO_2 modules, ECG modules, NIBP modules, and wireless receivers working simultaneously. The Bluetooth signal strength around the SpO_2 module should be no less than -70 dBm. The distance between the interfering devices and the SpO_2 module is greater than 20 cm. The interfering devices include 2.4 GHz Wi-Fi devices, cellular mobile networks, microwave ovens, intercoms, and cordless phones.

NFC Specifications

Item	Description
Protocol	• SpO_2 module/Wireless receiver: ISO/IEC 14443 A; ISO/IEC 14443 B • ECG module/NIBP module: ISO/IEC 14443 A
Operating frequency	13.56 MHz
Modulation mode	ASK (SpO_2 module/Wireless receiver)
Data security	Private protocol

B.5 Measurement Specifications

Items marked with an asterisk symbol “*” are applicable only when the SpO_2 module is in Bluetooth connection with this device.

B.5.1 ECG Specifications

ECG

Item	Description
Lead Set	3-lead: I, II, and III
ECG standard	AHA, IEC
Display sensitivity	• 1.25 mm/mV (x0.125), 2.5 mm/mV (x0.25), 5 mm/mV (x0.5), 10 mm/mV (x1), 20 mm/mV (x2), 40 mm/mV (x4), Auto, less than 5% error • With ±800 mV direct current polarization voltage, the sensitivity change is within ±5% • The sensitivity change is ≤3% after 1 minute and 1 hour since the device starts up.
Sweep speed	6.25 mm/s, 12.5 mm/s, 25 mm/s, 50 mm/s, less than ±5% error
Bandwidth (-3dB)	• **Monitor**: **0.5 Hz to 40 Hz** $\begin{pmatrix} 0.4dB \\ -3.0dB \end{pmatrix}$ • **Surgery**: **1 Hz to 20 Hz** $\begin{pmatrix} 0.4dB \\ -3.0dB \end{pmatrix}$ • **ST**: **0.05 Hz to 40 Hz** $\begin{pmatrix} 0.4dB \\ -3.0dB \end{pmatrix}$
Common mode rejection ratio	• **Monitor**: >105 dB • **Surgery**: >105 dB • **ST**: >105 dB
Notch filter	**Monitor**, **Surgery**, and **ST**: 50/60 Hz, notch filter turns on automatically
Differential input impedance	≥5MΩ
Input signal range	±10 mV (peak-to-peak value)
Electrode offset potential tolerance	±800 mV
Input offset current	≤0.1 μA, (drive lead≤1μA)
Baseline recovery time	<5s (after defibrillation)
Defibrillation protection and recovery time	Enduring 5000V (360 J) charge without data loss or corruption Baseline recovery time: <5s (after defibrillation) Polarization recovery time: <10s Defibrillation energy absorption: ≤10% (100Ω load)
Patient leakage current	<10 μA

Item	Description
Calibration signal	1mV (peak-to-peak value) ±5%
ESU protection	In compliance with the requirements of IEC 60601-2-27. • Cut mode: 300 W • Coagulate mode: 100 W • Recovery time: ≤10s
ESU noise rejection	≤ 2 mV (peak-to-peak value), use standard ECG leadwires, relative to the ECG baseline

Pace Pulse

Item	Description
Pace pulse markers	Pace pulses meeting the following conditions are labelled with a PACE marker: • Amplitude: ±2 mV to ±700 mV • Width: 0.1 ms to 2 ms • Rise time: 10 μs to 100 μs
Pace pulse rejection	When tested in accordance with the IEC 60601-2-27, the heart rate meter rejects all pulses meeting the following conditions: • Amplitude: ±2 mV to ±700 mV • Width: 0.1 ms to 2 ms • Rise time: 10 μs to 100 μs • No overshoot

HR

Item	Description
Measurement range	15 bpm to 350 bpm
Resolution	1 bpm
Accuracy	±1 bpm or ±1%, whichever is greater
HR averaging method	In compliance with the requirements of IEC 60601-2-27. The following method is used: If the last 3 consecutive RR intervals are greater than 1200 ms, the 4 most recent RR intervals are averaged to compute the HR. Otherwise, heart rate is computed by subtracting the maximum and minimum ones from the most recent 12 RR intervals and then averaging them The HR value displayed on the device screen is updated no more than one second.

Item	Description
Response to irregular rhythm	In compliance with the requirements of IEC 60601-2-27. The heart rate after 20 seconds of stabilization is displayed as follows: • Ventricular bigeminy (waveform 3a): 80±1 bpm • Slow alternating ventricular bigeminy (waveform 3b): 60±1 bpm • Rapid alternating ventricular bigeminy (waveform 3c): 120±1 bpm • Bidirectional systoles (waveform 3d): 90±2 bpm
Response time to heart rate change	In compliance with the requirements of IEC 60601-2-27. • From 80 to 120 bpm: less than 11s • From 80 to 40 bpm: less than 11s
Time to alarm for tachycardia	In compliance with the requirements of IEC 60601-2-27. Waveform: • 4ah-range: <11s • 4a-range: <11s • 4ad-range: <11s • 4bh-range: <11s • 4b-range: <11s • 4bd-range: <11s
Tall T-wave rejection capability	When the test is performed based on IEC 60601-2-27, the heart rate calculation is not affected for QRS of 100 ms duration, T-wave duration of 180 ms and amplitude lower than 1.2 mV, and QT interval of 350 ms.
Arrhythmia analysis classifications	Asystole, V-Fib/V-Tach, V-Tach, Vent Brady, Extreme Tachy, Extreme Brady, PVCs/min High, R on T, Run PVCs, Couplet, Multiform PVC, PVC, Bigeminy, Trigeminy, Tachy, Brady, Pacer Not Pacing, Pacer Not Capture, Missed Beat, Nonsus V-Tach, Vent Rhythm, Pause, Irr Rhythm, Pauses/min High, SVT, SVCs/min High Restrain

ST Segment Analysis

Item	Description
Measurement range	–2.5 mV to +2.5 mV
Accuracy	-0.8 mV to 0.8 mV: ±0.02 mV or ±10%, whichever is greater Beyond this range: Not specified.
Resolution	0.01 mV

QT/QTc Analysis

Item	Description
Measurement range	QT: 200 ms to 800 ms QTc: 20 ms to 800 ms QT-HR: 15 bpm to 180 bpm
Accuracy	QT: ±30 ms
Resolution	QT:4 ms QTc: 1 ms

Alarm Limit

Item		Description
HR	High limit	Range: • HR ≤ 40 bpm: (low limit + 2 bpm) to 40 bpm • HR > 40bpm: (low limit + 5 bpm) to 295 bpm
		Step • HR ≤ 40 bpm: 1 bpm • HR > 40 bpm: 5 bpm
	Low limit	Range: • HR ≤ 40bpm: 16 bpm to (high limit - 2 bpm) • HR > 40 bpm: 40 bpm to (high limit - 5 bpm)
		Step • HR ≤ 40 bpm: 1 bpm • HR > 40 bpm: 5 bpm
ST	High limit	(low limit + 0.2 mV) to 2.0 mV (ST alarm mode: Absolute) 0 to 2.0 mV (ST alarm mode: Relative)
		Step: 0.05 mV
	Low limit	-2.0 mV to (high limit - 0.2 mV) (ST alarm mode: Absolute) 2.0 mV to 0 mV (ST alarm mode: Relative)
		Step: 0.05 mV
QTc high limit		Range: 200 ms to 800 ms
		Step: 10 ms
ΔQTc high limit		Range: 30 ms to 200 ms
		Step: 10 ms

B.5.2 Resp Specifications

Item	Description
Lead	Options are lead I, lead II and auto
Respiration excitation waveform	Less than 300 μA RMS, 64 kHz (±10%)
Minimum respiration impedance threshold	0.3Ω
Baseline impedance range	200Ω to 2500Ω (using an ECG cable with 1kΩ resistance)
Measurement range	0 to 150 rpm
Resolution	1 rpm
Accuracy	0 to 120 rpm: ±1 rpm 121 rpm to 150 rpm: ±2 rpm
Apnea alarm time	10s, 15s, 20s, 25s, 30s, 35s, 40s
Alarm limit	RR High • Range (rpm): (low limit + 2) to 150 • Step: 1rpm
	RR Low • Range (rpm): 0 to (high limit - 2) • Step: 1rpm

B.5.3 SpO_2 Specifications

Item	Description
Measurement range	0% to 100%
Resolution	1%
Response time	< 30s (normal perfusion, no disturbance, SpO_2 value sudden changes from 70% to 100%)
Accuracy	70% to 100%: ±3%ABS 0% to 69%: Not specified.
Refreshing rate	≤ 2s
Perfusion index (PI)	Measurement range: 0.05 to 20%, measurement error not specified
	Resolution • PI < 10.0: 0.01 • PI ≥ 10.0: 0.1

Item	Description
Alarm limit	SpO_2 High • Range: (low limit + 2%) to 100% • Step: 1%
	SpO_2 Low • Range: (Desat+1%) to (high limit - 2%) • Step: 1%
	SpO_2 Desat Low: • Range: 0 to (low limit - 1%) • Step: 1%

B.5.4 PR Specifications

Alarm limit

Item	Description
PR High	Range: • PR≤40 bpm: (low limit + 2 bpm) to 40 bpm • PR>40 bpm: (low limit + 5 bpm) to 295 bpm
	Step • PR≤40: 1 • PR>40: 5
PR Low	Range: • PR≤40bpm: 16 bpm to (high limit - 2 bpm) • PR > 40 bpm: 40 bpm to (high limit - 5 bpm)
	Step • PR≤40: 1 • PR>40: 5

PR from SpO_2 Module

Item	Description
Measurement range	20 bpm to 300 bpm
Resolution	1 bpm
SpO_2 specifications	<30 s (normal perfusion, no disturbance, PR value sudden changes from 25 bpm to 240 bpm)
Accuracy	+3 bpm
Refreshing rate	≤ 2s

B.5.5 NIBP Specifications

Item	Description
Mode of operation	Manual, Interval, NIBP STAT, Sequence, Clock
Auto mode repetition intervals	1 min, 2 min, 2.5 min, 3 min, 5 min, 10 min, 15 min, 20 min, 30 min, 1 hr, 1.5 hrs, 2 hrs, 3 hr, 4 hrs, 8 hrs
STAT mode cycle time	5 min
Max measurement time	120s
Measurement range	Systolic (mmHg): • Weight >23kg (>50 lb): 25 to 290 • Weight 10 kg to 23 kg (21 lb to 50 lb): 25 to 240 • Weight <10 kg (<21 lb): 25 to 240
	Diastolic (mmHg): • Weight >23kg (>50 lb): 10 to 250 • Weight 10 kg to 23 kg (21 lb to 50 lb): 10 to 200 • Weight <10 kg (<21 lb): 10 to 200
	Mean (mmHg): • Weight >23kg (>50 lb): 15 to 260 • Weight 10 kg to 23 kg (21 lb to 50 lb): 15 to 215 • Weight <10 kg (<21 lb): 15 to 215
Accuracy	Max mean error: ±5 mmHg Max standard deviation: 8 mmHg
Resolution	1 mmHg (0.1 kPa)
Initial cuff inflation pressure range (mmHg)	• Weight >23kg (>50 lb): 80 to 280 • Weight 10 kg to 23 kg (21 lb to 50 lb): 80 to 210 • Weight <10 kg (<21 lb): 80 to 210
Default initial cuff inflation pressure (mmHg)	• Weight range >23 kg: 160 • Weight 10 kg to 23 kg (21 lb to 50 lb): 25 to 140 • Weight range <10 kg: 140
Software overpressure protection (mmHg)	297±3
Hardware overpressure protection (mmHg)	≤330
Static pressure measurement range	0 to 300 mmHg
Static pressure measurement accuracy	+3 mmHg

Item	Description
Systolic alarm limits	NIBP-D High (mmHg): • Weight >23kg (>50 lb): 25 to 290 • Weight 10 kg to 23 kg (21 lb to 50 lb): 25 to 240 • Weight <10 kg (<21 lb): 25 to 240
	NIBP-D Low (mmHg): 25 to (high limit - 5)
	Step (mmHg): 5
Mean alarm limits	NIBP-D High (mmHg): • Weight >23kg (>50 lb): 15 to 260 • Weight 10 kg to 23 kg (21 lb to 50 lb): 15 to 215 • Weight <10 kg (<21 lb): 15 to 215
	NIBP-D Low (mmHg): 15 to (high limit - 5)
	Step (mmHg): 5
Diastolic alarm limits	NIBP-D High (mmHg): • Weight >23kg (>50 lb): 10 to 250 • Weight 10 kg to 23 kg (21 lb to 50 lb): 10 to 200 • Weight <10 kg (<21 lb): 10 to 200
	NIBP-D Low (mmHg): 10 to (high limit - 5)
	Step (mmHg): 5

B.5.6 Temp Specifications

Item	Description
Measurement range	25°C to 45°C
Resolution	±0.1°C
Accuracy	±0.1 °C (±0.2 °F) (module) ±0.1 °C (±0.2°F) (sensor)
High limit	Range: (low limit + 1ºC) to 50.0ºC
	Step: 0.1ºC (0.1ºF)
Low limit	Range: 0.1ºC to (high limit - 1ºC)
	Step: 0.1ºC (0.1ºF)

B.6 Infusion Pump

B.6.1 Infusion Control

Item	Description
Accuracy	Universal tube configuration model: • Infusion accuracy: ≤ ±5% (use SHINVA ANDE single use infusion set for pump) • Infusion accuracy: ≤±4.5% (use B. Braun Intrafix Primeline) • Bolus accuracy: ≤ ±5% or ±0.02 ml, whichever is greater • Long-time infusion accuracy: At the 25 ml/h rate, the accuracy error within 24 hours does not exceed ±10%(use B. Braun Intrafix Primeline) • Standard condition: Test in accordance with IEC 60601-2-24:2012 • Atmosphere temperature: 20 ± 2ºC
Range of the infusion rate	Adjustable range: 0.1 ml/h to 2000 ml/h
	Minimum resolution: • 0.01ml/h (0.1 ml/h to 99.99 ml/h) • 1ml/h (1000 ml/h to 2000 ml/h)
Rang of bolus rate	Adjustable range of fast push speed: 0.1ml/h to 2000ml/h
	Minimum resolution: • 0.01ml/h (0.1 ml/h to 99.99 ml/h) • 0.1ml/h (100.0 ml/h to 999.9ml/h) • 1ml/h (1000 ml/h to 2000ml/h)
Time set range	00:00:01 to 99:59:59 (h:min:sec), minimum resolution:1 second
VTBI set range	0.1 ml to 9999 ml • 0.1 ml to 999.9 ml: step is 0.1 ml • 1000 ml to 9999 ml: step is 1 ml
Volume range	0.0 ml to 9999 ml
Occlusion pressure	150 mmHg to 1125 mmHg, 5 adjustable levels in total
Bubble size	50 µl, 100 µl, 250 µl, 500 µl, 800 µl
Accumulated bubble	0.1 ml to 4.0 ml
KVO Rate	0.1 ml/h to 5.0 ml/h

WARNING

The infusion accuracy and pressure detection are affected by viscosity of liquids and disposables used (for example diameter, material, elasticity and needle).

B.6.2 Recommended Infusion Sets

Product Name	Model	Manufacturer
Single Use Infusion Set for Pump	BPQ	SHINVA ANDE HEALTHCARE APPARATUS CO., LTD
B.Braun Intrafix Primeline	Intrafix Primeline	B.Braun Melsungen AG

NOTE

The pump will not affect the quality of disposables from other suppliers. Changes in quality may affect the technical data of the pump. Mindray Animal Medical is not responsible for such changes.

B.6.3 Infusion Warmer

Item	Description
Heating temperature (outlet temperature) setting range	32 ℃ to 40 ℃
Resolution	0.1℃
Temperature control accuracy in Intelligent Flow-Linked Heating mode with the built-in pump	-2.5℃ to +0.5℃

B.6.4 Occlusion Alarm Delay and Bolus Volume

The maximum time required for the occlusion alarm to be triggered when the pump operates under the following conditions:

Rate (ml/h)	Occlusion pressure (mmHg)	Alarm time (hh: mm: ss)
1	150	＜ 00:18:00
	1125	＜ 02:01:00
25	150	＜ 00:01:50
	1125	＜ 00:03:25

Test conditions:

- Infusion set brand: B.Braun Intrafix Primeline
- Test temperature: 20°C ±2°C
- Infusion line length: 1 meter

When the pump operates under the following conditions, the bolus volume is:

Rate (ml/h)	Bolus volume after occlusion (ml)	
	High occlusion alarm pressure level	Low occlusion alarm pressure level
25	＜ 0.18	＜ 0.18

Test conditions:

- Infusion set brand: B.Braun Intrafix Primeline
- Anti-bolus: On
- Test temperature: 20°C ±2°C
- Infusion line length: 1 meter

NOTE

Occlusion alarm pressure, alarm delays and bolus volume may vary depending on test conditions, temperature and tube length.

B.6.5 Infusion Accuracy Graphs

Infusion accuracy at 1 ml/h

Rate: 1 ml/h Trumpet Curve (2nd hour)

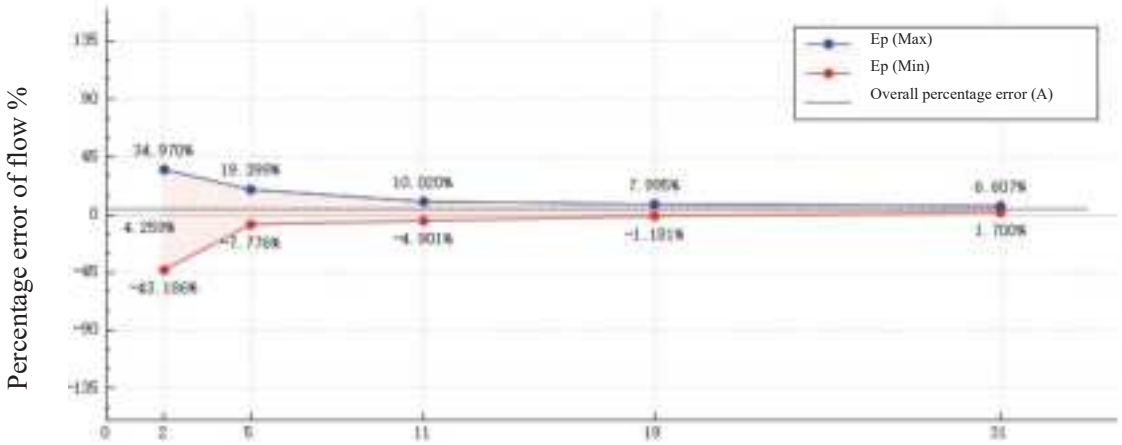

Rate: 1 ml/h

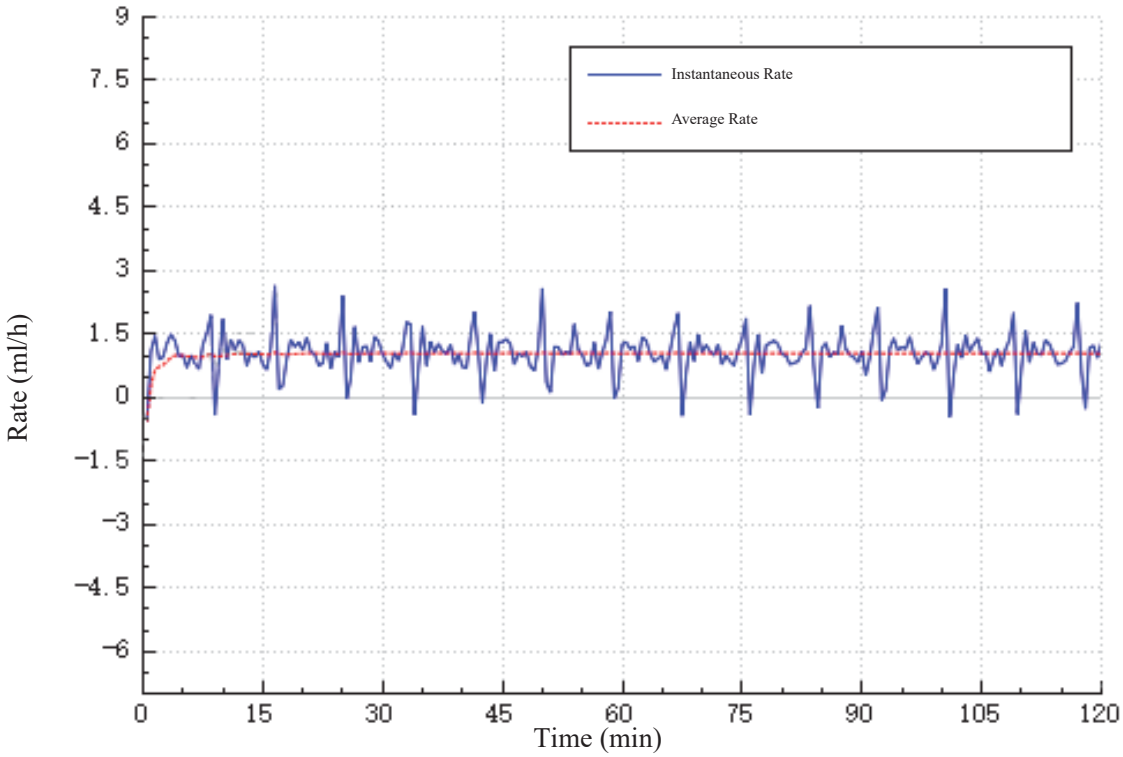

Infusion accuracy at 25ml/h

Set Rate: 25 ml/h Trumpet Curve (2nd hour)

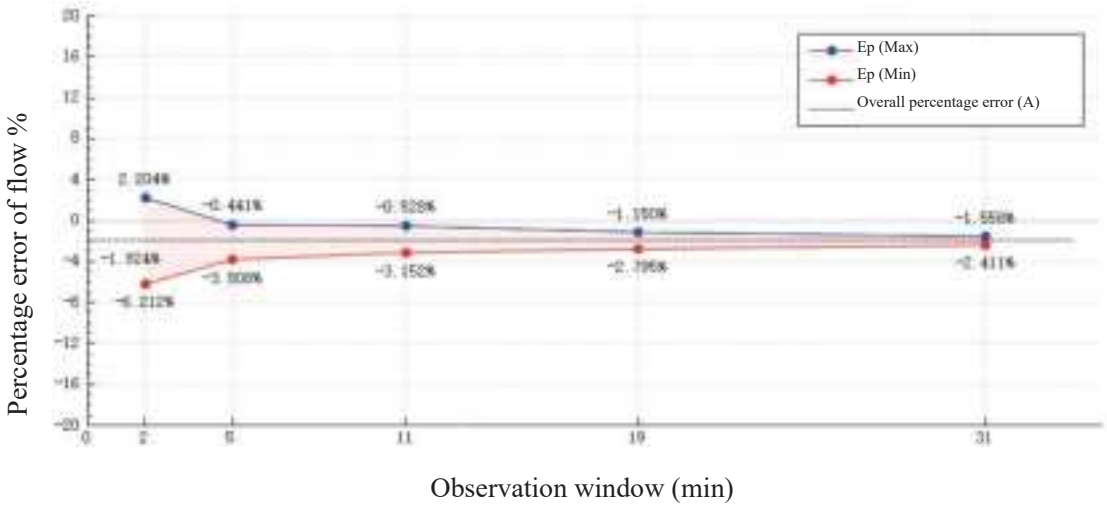

Set Rate: 25 ml/h Trumpet Curve (last hour)

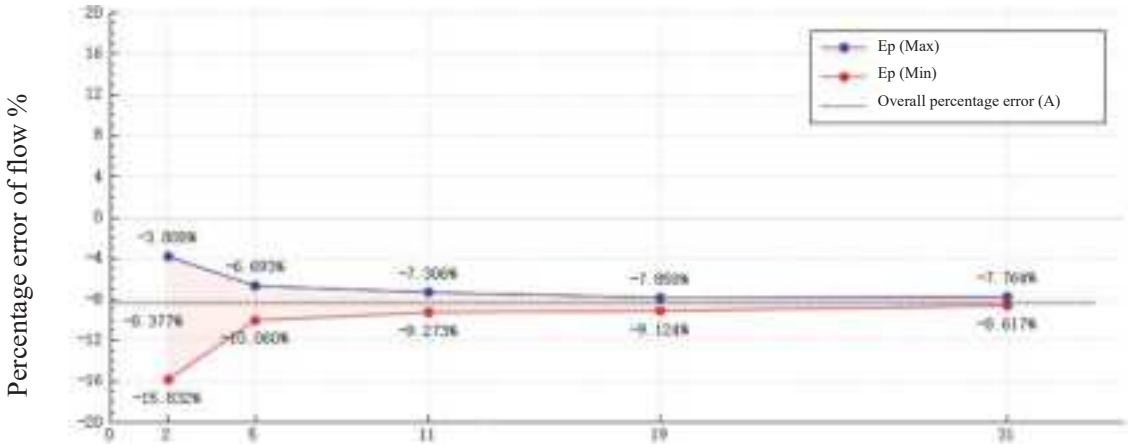

Observation window (min)

Set Rate: 25 ml/h

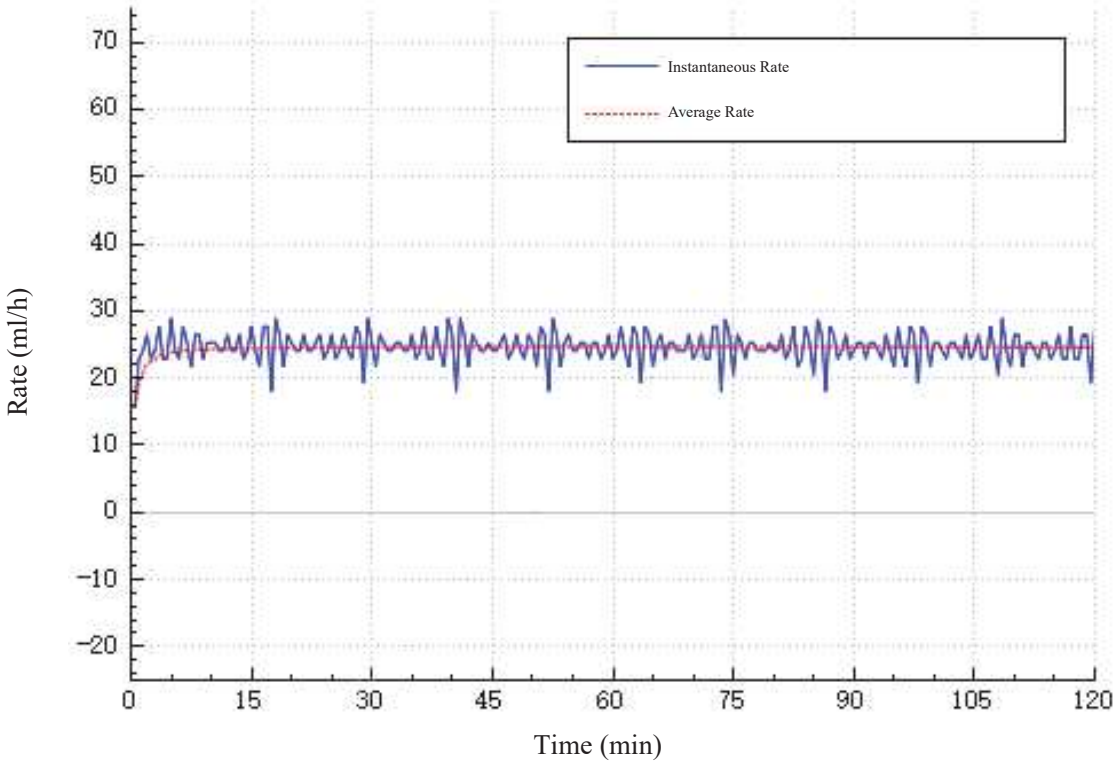

Test conditions:

- Infusion set brand: B.Braun Intrafix Primeline
- Test interval: △ t =0.5 minutes
- Sampling quantity of pump: 3
- Sampling quantity of infusion set: 3

NOTE

Infusion accuracy may be influenced by the pump's environment (such as pressure, temperature, humidity, and any infusion consumables used).

B.7 Environment Specifications

Item		Index
Air heating temperature control performance	Temperature stability	0.5°C (Atmosphere temperature is 22°C to 25°C, no wind, and the target air temperature inside the device is set to 32°C)
	Temperature control accuracy	±1°C (Atmosphere temperature is 22°C to 25°C, no wind, and the target air temperature inside the device is set to 32°C)
	Temperature control uniformity	≤2°C (Atmosphere temperature is 22°C to 25°C, no wind, and the target air temperature inside the device is set to 32°C)
	Temperature display accuracy	±1.5°C (Atmosphere temperature is 22°C to 25°C, no wind, and the target air temperature inside the device is set to 32°C)
	Rise time	≤ 5°C (time of rising 5°C, atmosphere temperature is 22°C to 25°C, no wind, and the target air temperature inside the device is set to 32°C)
	Wind speed	≤0.4 m/s (Atmosphere temperature is 22°C to 25°C, no wind, and the target air temperature inside the device is set to 32°C)
	Noise inside the device	≤50dBA (Atmosphere temperature is 22°C to 25°C, no wind, and the target air temperature inside the device is set to 32°C)

Item		Index
Air conditioner refrigeration performance	Temperature control stability	2.5°C (Atmosphere temperature is 24°C to 27°C, no wind, and the target air temperature inside the device is set to 18°C)
	Temperature control accuracy	±2°C (Atmosphere temperature is 24°C to 27°C, no wind, and the target air temperature inside the device is set to 18°C)
	Temperature control uniformity	≤2°C (Atmosphere temperature is 24°C to 27°C, no wind, and the target air temperature inside the device is set to 18°C)
	Temperature display accuracy	±2.5°C (Atmosphere temperature is 24°C to 27°C, no wind, and the target air temperature inside the device is set to 18°C)
	Fall time	≤20 min (time of falling 5°C, atmosphere Temp is 24°C to 27°C, no wind)
	Noise inside the device	≤60 dBA (Atmosphere temperature is 24°C to 27°C, no wind, and the target air temperature inside the device is set to 18°C)
Floor heating temperature control performance	Temperature stability	0.5°C (Atmosphere temperature is 22°C to 25°C, no wind, and the target floor temperature inside the device is set to 32°C)
	Temperature control accuracy	±1°C (Atmosphere temperature is 22°C to 25°C, no wind, and the target floor temperature inside the device is set to 32°C)
	Temperature control uniformity	≤2°C (Atmosphere temperature is 22°C to 25°C, no wind, and the target floor temperature inside the device is set to 32°C)
	Temperature display accuracy	±1.5°C (Atmosphere temperature is 22°C to 25°C, no wind, and the target floor temperature inside the device is set to 32°C)
	Heating performance	• ≤4 min (ViCare U7L/ViCare U7R) • ≤7 min (ViCare U7) (Time required for the floor temperature to rise by 5°C, atmosphere temperature is 22°C to 25°C, no wind, and the target floor temperature inside the device is set to 32°C)

Item		Index
Floor refrigeration control performance	Temperature control stability	1℃ (atmosphere temperature is 22℃ to 25℃, no wind, and the target floor temperature inside the device is set to 20℃)
	Temperature control accuracy	±1℃ (Atmosphere temperature is 22℃ to 25℃, no wind, and the target floor temperature inside the device is set to 20℃)
	Temperature control uniformity	≤2℃ (Atmosphere temperature is 22℃ to 25℃, no wind, and the target floor temperature inside the device is set to 20℃)
	Temperature display accuracy	±1.5℃ (Atmosphere temperature is 22℃ to 25℃, no wind, and the target floor temperature inside the device is set to 20℃)
	Fall time	≤30 min (Time required for the floor temperature to fall by ℃, atmosphere Temp is 24℃ to 27℃, no wind, and the target floor temperature inside the device is set to 18℃)
	Noise	≤50dBA (Atmosphere Temp is 22℃ to 25℃, no wind, and the target floor temperature inside the device is set to 20℃)
Humidification performance	Relative humidity upper control limit	80% (Atmosphere Temp 22~25℃, normally open for vaporization and humidification; the humidity inside the device may be greater than 80%)
	Relative humidity display accuracy	±7% (Atmosphere temperature is 22℃ to 25℃, ambient humidity is ≤60%, humidity inside the device can be set to 80%)
	Humidification rise time (Time when humidity is increased by 10%)	≤5 min (Atmosphere temperature is 22℃ to 25℃, ambient humidity is ≤60%, humidity inside the device can be set to 80%)
	Condensing state	Anhydrous condensation (Atmosphere temperature is 22℃ to 25℃, ambient humidity is ≤60%, humidity inside the device can be set to 80%)
Semiconductor dehumidification performance	Dehumidification control relative humidity range	≤60% (Atmosphere temperature is 24℃ to 27℃, ambient humidity is ≤80%, humidity inside the device is set to 30%)
	Dehumidification amount	≥8g/h (Atmosphere temperature is 22℃ to 25℃, ambient humidity is ≤60%; the temperature inside the device is maintained at 24℃ to 27℃; the humidity inside the device is ≥80%. In this case, dehumidification is normally working)
	Humidity display accuracy	±7% (Atmosphere temperature is 24℃ to 27℃, ambient humidity is ≤80%, humidity inside the device is set to 30%)
	Noise	≤50dBA (Atmosphere temperature is 24℃ to 27℃, ambient humidity is ≤80%, humidity inside the device is set to 30%)

Item		Index
Oxygen supply inlet	Gas supply pressure range (High-pressure oxygen inlet)	200 kPa to 600 kPa
	Gas supply pressure range (Low-pressure oxygen inlet)	0 to 220 kPa
Oxygen flow monitoring	Flow reading Range	0 to 30 LPM
	Accuracy	±300 ml/min or ±5%, whichever is greater
Oxygen concentration monitoring inside the device	Concentration monitoring range	15 vol% to 100 vol%
High-pressure oxygen supply	Oxygen concentration rise time (ViCare U7)	(21 vol% to 40 vol%)≤5 min
	Oxygen concentration rise time (ViCare U7L/ ViCare U7R)	(21 vol% to 40 vol%)≤3 min
	Noise inside the device	≤53 dBA
CO_2 concentration monitoring inside the device	Concentration monitoring range	400 ppm to 5000 ppm
Emergency ventilation	CO_2 concentration	Fall time from 3000 ppm to 2000 ppm: ≤6 min
CO_2 active absorption system	ViCare U7	When the 3.75 LPM 4% CO_2 gas is continuously supplied, the CO_2 concentration in the device is maintained below 3000 ppm, and the soda lime replacement interval is ≥ 24 hours
	ViCare U7L/ViCare U7R	When the 1.5 LPM 4% CO_2 gas is continuously supplied, the CO_2 concentration in the device is maintained below 2000 ppm, and the soda lime replacement interval is ≥ 24 hours

Item		Index
Normal oxygen adjustment	Maximum oxygen concentration (10 SLPM)	≥40 vol% (10 SLPM oxygen supply flow, oxygen concentration ≥99%)
	Maximum oxygen concentration (20 SLPM)	≥60 vol% (high-pressure oxygen supply, pressure: 200 kPa to 600 kPa, maximum output flow ≥50 SLPM, oxygen concentration≥99%)
	Oxygen concentration rise time	• ≤25 min (ViCare U7) • ≤15 min (ViCare U7L/ViCare U7R) (Time from 21 vol% to 40 vol%, oxygen supply flow of 10 SLPM, oxygen concentration ≥99%)
	Oxygen Concentration control accuracy	±4 vol% (high-pressure oxygen supply, pressure: 200 kPa to 600 kPa, maximum output flow: ≥50 SLPM, oxygen concentration≥99%, set the oxygen concentration to 40%)
	Oxygen Concentration Control Stability	3 vol% (oxygen supply by high-pressure oxygen cylinder, pressure: 200 kPa to 600 kPa, maximum output flow: ≥50 SLPM, oxygen concentration≥99%, set the oxygen concentration to 40%)
	Noise	≤50 dBA (non-fast oxygen ventilation period)

C EMC Guidance and Manufacturer's Declaration

The device meets the requirements of IEC 60601-1-2:2014+A1:2020.

WARNING

- This device is intended for use by healthcare professionals only. This device may cause radio interference or may disrupt the operation of nearby device. It may be necessary to take mitigation measures, such as re-orienting or relocating the device or shielding the location.
- Use of accessories and cables other than those specified or provided by the manufacturer of this device could result in increased electromagnetic emissions or decreased electromagnetic immunity of this device and result in improper operation.
- Use of this device adjacent to or stacked with other equipment should be avoided because it could result in improper operation. If such use is necessary, this device and the other equipment should be observed to verify that they are operating normally.
- The device may be interfered with by other equipment, even if that other equipment complies with CISPR EMISSION requirements.
- The use of the ACCESSORY cable with the device other than those specified may result in increased EMISSIONS or decreased IMMUNITY of the device.
- Portable RF communications equipment (including peripherals such as antenna cables and external antennas) should be used no closer than 30 cm (12 inches) to any part of the device, including cables specified by the manufacturer. Otherwise, degradation of the performance of this device could result.
- The device needs special precautions regarding EMC and needs to be installed and put into service according to the EMC information provided below.

If the device is operated within the electromagnetic environment listed in **Table C-2**,**Table C-3**and**Table C-6**, the device will remain safe and will provide the following basic performances:

- Operating mode
- Accuracy
- Function
- Accessories identification

- Data stored
- Alarm
- Detect for connection
- Protection against UNINTENDED BOLUS volumes
- Occlusion

Table C-1

Guidance and manufacturer's declaration – electromagnetic emissions		
The device is intended for use in the electromagnetic environment specified below. The customer or the user of the ME EQUIPMENT should assure that it is used in such an environment.		
Emissions test	**Compliance**	**Electromagnetic environment – guidance**
RF emissions CISPR 11	Group 1	The device uses RF energy only for its internal function. Therefore, its RF emissions are very low and are not likely to cause any interference in nearby electronic equipment.
RF emissions CISPR 11	Class A	The device is suitable for use in all establishments other than domestic and those directly connected to the public low-voltage power supply network that supplies buildings used for domestic purposes.
Harmonic emissions IEC 61000-3-2	Not applicable	
Voltage fluctuations/flicker emissions IEC 61000-3-3	Not applicable	

Table C-2

Guidance and manufacturer's declaration – electromagnetic immunity			
The device is intended for use in the electromagnetic environment specified below. The customer or the user of the device should assure that it is used in such an environment.			
IMMUNITY test	**IEC 60601 test level**	**Compliance level**	**Electromagnetic environment – guidance**
Electrostatic Discharge (ESD) IEC 61000-4-2	±8 kV contact ±2 kV, ±4 kV, ±8 kV, ±15 kV air	±8 kV contact ±2 kV, ±4 kV, ±8 kV, ±15 kV air	Floors should be wood, concrete or ceramic tile. If floors are covered with synthetic material, the relative humidity should be at least 30%.
Electrical fast transient/ burst IEC 61000-4-4	±2 kV for power supply lines ±1 kV for input/output lines	±2 kV for power supply lines ±1 kV for input/output lines	Mains power quality should be that of a typical commercial or hospital environment.

Table C-2

Guidance and manufacturer's declaration – electromagnetic immunity			
The device is intended for use in the electromagnetic environment specified below. The customer or the user of the device should assure that it is used in such an environment.			
IMMUNITY test	**IEC 60601 test level**	**Compliance level**	**Electromagnetic environment – guidance**
Surge IEC 61000-4-5	±0.5 kV, ±1 kV line(s) to line(s) ±0.5 kV, ±1 kV, ±2 kV line(s) to earth	±0.5 kV, ±1 kV line(s) to line(s) ±0.5 kV, ±1 kV, ±2 kV line(s) to earth	Mains power quality should be that of a typical commercial or hospital environment. Mains power quality should be that of a typical commercial or hospital environment. If the user of the device requires continued operation during power mains interruptions, it is recommended that the device be powered from an uninterruptible power supply or a battery.
Voltage dips, short interruptions and voltage variations on power supply input lines IEC 61000-4-11	0% U_T; 0.5 cycle At 0°, 45°, 90°, 135°,180°, 225°, 270° and 315° 0% U_T; 0.5 cycle At 0° 70% U_T; 25/30 cycle At 0° 0% U_T; 250/300 cycle	0% U_T; 0.5 cycle At 0°, 45°, 90°, 135°,180°, 225°, 270° and 315° 0% U_T; 0.5 cycle At 0° 70% UT; 25/30 cycle At 0° 0% U_T; 250/300 cycle	Mains power quality should be that of a typical commercial or hospital environment. Mains power quality should be that of a typical commercial or hospital environment. If the user of the device requires continued operation during power mains interruptions, it is recommended that the device be powered from an uninterruptible power supply or a battery.
50/60 Hz IEC 61000-4-8	30 A/m	30 A/m	Power frequency magnetic fields should be at levels characteristic of a typical location in a typical commercial or hospital environment.
Note: U_T is the a.c. mains voltage prior to application of the test level.			

Table C-3

Guidance and manufacturer's declaration – electromagnetic immunity			
The device is intended for use in the electromagnetic environment specified below. The customer or the user of the device should assure that it is used in such an environment.			
IMMUNITY test	**IEC 60601 test level**	**Compliance level**	**Electromagnetic environment – guidance**
Conducted RF IEC 61000-4-6	3 Vrms 150 kHz to 80 MHz 10 Vrms 150 kHz to 80 MHz in ISM bands[a]	3 Vrms 150 kHz to 80 MHz 10 Vrms 150 kHz to 80 MHz in ISM bands[a]	Portable and mobile RF communications equipment should be used no closer to any part of the device, including cables, than the recommended separation distance calculated from the equation applicable to the frequency of the transmitter. Recommended separation distance $d = \left[\frac{3.5}{V_1}\right] \cdot \sqrt{P}$ $d = \left[\frac{3.5}{E_1}\right] \cdot \sqrt{P}$ **80 MHz to 800 MHz** $d = \left[\frac{7}{E_2}\right] \cdot \sqrt{P}$ **800 MHz to 2.7 GHz** where P is the maximum output power rating of the transmitter in watts (W) according to the transmitter manufacturer and d is the recommended separation distance in meters (m).[b] Field strengths from fixed RF transmitters, as determined by an electromagnetic site survey[c], should be less than the compliance level in each frequency range.[d] Interference may occur in the vicinity of equipment marked with the following symbol:
Radiated RF IEC 61000-4-3	10 V/m 80 MHz to 2.7 GHz	10 V/m 80 MHz to 2.7 GHz	

Table C-3

Guidance and manufacturer's declaration – electromagnetic immunity			
The device is intended for use in the electromagnetic environment specified below. The customer or the user of the device should assure that it is used in such an environment.			
IMMUNITY test	**IEC 60601 test level**	**Compliance level**	**Electromagnetic environment – guidance**

Note 1: At 80 MHz and 800 MHz, the higher frequency range applies.

Note 2: These guidelines may not apply in all situations. Electromagnetic propagation is affected by absorption and reflection from structures, objects and people.

[a]The ISM (industrial, scientific and medical) bands between 150 kHz and 80 MHz are 6.765 MHz to 6.795 MHz; 13.553 MHz to 13.567 MHz; 26.957 MHz to 27.283 MHz; and 40.66 MHz to 40.70 MHz.

[b]The compliance levels in the ISM frequency bands between 150 kHz and 80 MHz and in the frequency range 80 MHz to 2.7 GHz are intended to decrease the likelihood that mobile/portable communications equipment could cause interference if it is inadvertently brought into patient areas. For this reason, an additional factor of 10/3 has been incorporated into the formulae used in calculating the recommended separation distance for transmitters in these frequency ranges.

[c]Field strengths from fixed transmitters, such as base stations for radio (cellular/cordless) telephones and land mobile radios, amateur radio, AM and FM radio broadcast and TV broadcast cannot be predicted theoretically with accuracy. To assess the electromagnetic environment due to fixed RF transmitters, an electromagnetic site survey should be considered. If the measured field strength in the location in which the device is used exceeds the applicable RF compliance level above, the device should be observed to verify normal operation. If abnormal performance is observed, additional measures may be necessary, such as re-orienting or relocating the device.

[d]Over the frequency range 150 kHz to 80 MHz, field strengths should be less than [V1] V/m.

Table C-4

Recommended separation distances between portable and mobile RF communications equipment and the device				
The device is intended for use in an electromagnetic environment in which radiated RF disturbances are controlled. The customer or the user of the device can help prevent electromagnetic interference by maintaining a minimum distance between portable and mobile RF communications equipment (transmitters) and the device as recommended below, according to the maximum output power of the communications equipment.				
Rated maximum output power of transmitter (W)	**Separation distance according to frequency of transmitter (m)**			
	150 kHz - 80 MHz outside ISM bands $d = \left[\frac{3.5}{V_1}\right] \cdot \sqrt{P}$	Within 150 kHz - 80 MHz in ISM bands $d = \left[\frac{12}{V_2}\right] \cdot \sqrt{P}$	80 MHz to 800 MHz $d = \left[\frac{12}{E_1}\right] \cdot \sqrt{P}$	800 MHz to 2.7 GHz $d = \left[\frac{23}{E_{12}}\right] \cdot \sqrt{P}$
0.01	0.12	0.2	0.12	0.23
0.1	0.38	0.64	0.38	0.73
1	1.2	2	1.2	2.3
10	3.8	6.4	3.8	7.3

Table C-4

Recommended separation distances between portable and mobile RF communications equipment and the device				
The device is intended for use in an electromagnetic environment in which radiated RF disturbances are controlled. The customer or the user of the device can help prevent electromagnetic interference by maintaining a minimum distance between portable and mobile RF communications equipment (transmitters) and the device as recommended below, according to the maximum output power of the communications equipment.				
Rated maximum output power of transmitter (W)	**Separation distance according to frequency of transmitter (m)**			
	150 kHz - 80 MHz outside ISM bands $d = \left[\frac{3.5}{V_1}\right] \cdot \sqrt{P}$	Within 150 kHz - 80 MHz in ISM bands $d = \left[\frac{12}{V_2}\right] \cdot \sqrt{P}$	80 MHz to 800 MHz $d = \left[\frac{12}{E_1}\right] \cdot \sqrt{P}$	800 MHz to 2.7 GHz $d = \left[\frac{23}{E_{12}}\right] \cdot \sqrt{P}$
100	12	20	12	23

For transmitters rated at a maximum output power not listed above, the recommended separation distance d in meters (m) can be determined using the equation applicable to the frequency of the transmitter, where P is the maximum output power rating of the transmitter in watts (W) according to the transmitter manufacturer.

NOTE 1 At 80 MHz and 800 MHz, the separation distance for the higher frequency range applies.

NOTE 2 The ISM (industrial, scientific and medical) bands between 150 kHz and 80 MHz are 6.765 MHz to 6.795 MHz; 13.553 MHz to 13.567 MHz; 26.957 MHz to 27.283 MHz; and 40.66 MHz to 40.70 MHz.

NOTE 3 An additional factor of 10/3 has been incorporated into the formulae used in calculating the recommended separation distance for transmitters in the ISM frequency bands between 150 kHz and 80 MHz and in the frequency range 80 MHz to 2.7 GHz to decrease the likelihood that mobile/portable communications equipment could cause interference if it is inadvertently brought into patient areas.

NOTE 4 These guidelines may not apply in all situations. Electromagnetic propagation is affected by absorption and reflection from structures, objects and people.

Table C-5

Recommended separation distances between portable and mobile RF communications equipment and this device						
The device is intended for use in an electromagnetic environment in which radiated RF disturbances are controlled. The customer or the user of this device can help prevent electromagnetic interference by maintaining a minimum distance between portable and mobile RF communications equipment (transmitters) and the device as recommended below, according to the maximum output power of the communications equipment. Portable and mobile radio communications equipment (e.g. two-way radio, cellular/ cordless telephones and similar equipment) should be used no closer to any part of this device, including cables, than determined according to the following method:						
MHz	**Band[a](MHz)**	**Communication Service[a]**	**modulation**	**Maximum Power (W)**	**Distance m**	**V/m**
385	380 - 390	TETRA 400	Pulse modulation[b] 18 Hz	1.8	0.3	27
450	430 - 470	GMRS 460, FRS 460	FM[c] ± 5 kHz deviation 1 kHz sine	2	0.3	28
710	704 - 787	LTE Band 13, 17	Pulse modulation[b] 217 Hz	0.2	0.3	9
745						
780						
810	800 - 960	GSM 800/ 900, TETRA 800, iDEN 820, CDMA 850, LTE Band 5	Pulse modulation[b] 18 Hz	2	0.3	28
870						
930						
1720	1700 - 1990	GSM 1800; CDMA 1900; GSM 1900; DECT; LTE Band 1, 3, 4, 25; UMTS	Pulse modulation[b] 217 Hz	2	0.3	28
1845						
1970						
2450	2400 - 2570	Bluetooth, WLAN, 802.11 b/g/n, RFID 2450, LTE Band 7	Pulse modulation[b] 217 Hz	2	0.3	28
5240	5100 - 5800	WLAN 802.11 a/n	Pulse modulation[b] 217 Hz	0.2	0.3	9
5500						
5785						
To achieve the immunity test level, the distance between the transmitting antenna and the ME equipment or ME system can be reduced to 1 m. IEC 61000-4-3 The allowable test distance is 1m.						

Table C-5

Recommended separation distances between portable and mobile RF communications equipment and this device						
The device is intended for use in an electromagnetic environment in which radiated RF disturbances are controlled. The customer or the user of this device can help prevent electromagnetic interference by maintaining a minimum distance between portable and mobile RF communications equipment (transmitters) and the device as recommended below, according to the maximum output power of the communications equipment. Portable and mobile radio communications equipment (e.g. two-way radio, cellular/ cordless telephones and similar equipment) should be used no closer to any part of this device, including cables, than determined according to the following method:						
MHz	**Band[a](MHz)**	**Communication Service[a]**	**modulation**	**Maximum Power (W)**	**Distance m**	**V/m**

a Some services only include the uplink frequency.

b The carrier should use 50% wifi use percent square wave signals for modulation.

c As an alternative to frequency modulation, carriers can use 50% wifi use percent square wave signals of 18 Hz for pulse modulation. Although it does not represent actual modulation, it will be the worst case.

Table C-6

Guidance and declaration—electromagnetic immunity			
The device is intended for use in the electromagnetic environment specified below. The customer or the user of device should assure that it is used in such an environment.			
IMMUNITY TEST	IEC 60601 TEST LEVEL	COMPLIANCE LEVEL	ELECTROMAGNETIC ENVIROMENT – GUIDANCE
Proximity magnetic fields IEC 61000-4-39	65 A/m 134.2 kHz Pulse modulation 2.1 kHz	65 A/m 134.2 kHz Pulse modulation 2.1 kHz	/
	7.5 A/m 13.56 MHz Pulse modulation 50 kHz	7.5 A/m 13.56 MHz Pulse modulation 50 kHz	

Table C-7 Cable Information

No.	**Name**	**Cable Length (m)**	**Shield or Not**	**Remarks**
1.	Power cord	5.0m	No	/
2.	ECG signal cable	2.9m	Yes	/
3.	SpO_2 signal cable	2.9m	Yes	/
4.	Temperature cable	0.5m	No	/

D Alarm Messages

D.1 Monitoring Alarm Messages

D.1.1 Physiological Alarms

General Physiological Alarm Messages

Alarm messages	Default priority	Cause and solution
XX High	Med	XX value has risen above the high alarm limit or fallen below the low alarm limit. Check the animal's condition and check if the species and alarm limit settings are correct.
XX Low	Med	XX value has fallen below the low alarm limit. Check the animal's condition and check if the species and alarm limit settings are correct.

TIP

XX represents a measurement or parameter label.

Arrhy. Alarm

Alarm messages	Default priority	Cause and solution
Asystole	High	Enter Event Review to view the parameters or waveform information at the alarm moment.
V-Fib/V-Tach	High	Enter Event Review to view the parameters or waveform information at the alarm moment.
V-Tach	High	Enter Event Review to view the parameters or waveform information at the alarm moment.
Vent Brady	High	Enter Event Review to view the parameters or waveform information at the alarm moment.

Alarm messages	Default priority	Cause and solution
Extreme Tachy	High	Enter Event Review to view the parameters or waveform information at the alarm moment.
Extreme Brady	High	Enter Event Review to view the parameters or waveform information at the alarm moment.
R on T	Med	Enter Event Review to view the parameters or waveform information at the alarm moment.
Run PVCs	Low	Enter Event Review to view the parameters or waveform information at the alarm moment.
Couplet	Prompt	Enter Event Review to view the parameters or waveform information at the alarm moment.
Multiform PVC	Med	Enter Event Review to view the parameters or waveform information at the alarm moment.
PVC	Prompt	Enter Event Review to view the parameters or waveform information at the alarm moment.
Bigeminy	Med	Enter Event Review to view the parameters or waveform information at the alarm moment.
Trigeminy	Med	Enter Event Review to view the parameters or waveform information at the alarm moment.
Tachy	Med	Enter Event Review to view the parameters or waveform information at the alarm moment.
Brady	Med	Enter Event Review to view the parameters or waveform information at the alarm moment.
Pacer Not Capture	Prompt	Enter Event Review to view the parameters or waveform information at the alarm moment.
Pacer Not Pacing	Prompt	Enter Event Review to view the parameters or waveform information at the alarm moment.
Missed Beat	Prompt	Enter Event Review to view the parameters or waveform information at the alarm moment.
Nonsus V-Tach	Med	Enter Event Review to view the parameters or waveform information at the alarm moment.
Vent Rhythm	Med	Enter Event Review to view the parameters or waveform information at the alarm moment.
Pause	Med	Enter Event Review to view the parameters or waveform information at the alarm moment.
Irr Rhythm	Prompt	Enter Event Review to view the parameters or waveform information at the alarm moment.
PVCs/min	Med	Enter Event Review to view the parameters or waveform information at the alarm moment.
Pauses/min	Med	Enter Event Review to view the parameters or waveform information at the alarm moment.
SVT	Med	Enter Event Review to view the parameters or waveform information at the alarm moment.

Alarm messages	Default priority	Cause and solution
SVCs/min	Med	Enter Event Review to view the parameters or waveform information at the alarm moment.

ST Physiological Alarm Messages

ST alarm mode	Alarm messages	Default priority	Cause and solution
Absolute	ST-XX High	**Med**	ST value of any ECG leads has risen above the high alarm limit or fallen below the low alarm limit. Check the animal's condition and check if the species and alarm limit settings are correct.
	ST-XX Low	**Med**	ST value of any ECG leads has risen above the high alarm limit or fallen below the low alarm limit. Check the animal's condition and check if the species and alarm limit settings are correct.
Relative	**ST Single**	**High**	ST value of any ECG leads has risen above the high alarm limit or fallen below the low alarm limit. Check the animal's condition and check if the species and alarm limit settings are correct.
	ST Dual	**Med**	ST values of two or more ECG leads have risen above the high alarm limit or fallen below the low alarm limit. Check the animal's condition and check if the species and alarm limit settings are correct.

TIP

XX represents the ECG lead label.

SpO_2 Physiological Alarm Messages

Alarm messages	Default priority	Cause and solution
SpO2 Desat	High	The SpO_2 value falls below the desaturation alarm limit. Check the animal's condition and check if the alarm limit settings are correct.

Resp Physiological Alarm Messages

Alarm messages	Default priority	Cause and solution
Zero RR	High	The respiration signal was so weak that the device cannot perform respiration analysis. Check the animal's condition, module and animal connections.

Alarm messages	Default priority	Cause and solution
Resp Artifact	Med	The animal's heartbeat has interfered with his respiration. Check the animal's condition and the Resp connections.

PR Physiological Alarm Messages

Alarm messages	Default priority	Cause and solution
No Pulse	High	The pulse signal was so weak that the device cannot perform pulse analysis. Check the animal's condition, SpO_2 sensor and measurement site.

D.1.2 Technical Alarms

This section lists technical alarms, their default priority, indication on alarm reset, and the actions that can be taken when an alarm occurs.

Technical alarms give different alarm indicators when the alarm system is reset. In this section we classify the technical alarms into three categories for easy clarification:

- Completely cleared: technical alarms are cleared. The device gives no alarm indications.
- Sound/light cleared: technical alarms are changed to the prompt messages.
- Unclearable: the alarm is silenced and a √ appears before the alarm message.

General Technical Alarm Messages

Alarm messages	Default priority	Indication on alarm reset	Cause and solution
XX Error	High	Unclearable	XX module does not work properly. Restart the device, if the alarm persists, contact the Customer Service Department or your local distributor.

NOTE

XX represents a measurement or parameter label.

ECG Technical Alarm Messages

Alarm messages	Default priority	Indication on alarm reset	Cause and solution
ME Disconnected	**Low**	Unclearable	ECG module is powered off for depleting of battery charge or moved out of the network coverage. Charge the battery, or move the ECG module back to network covered area.

Alarm messages	Default priority	Indication on alarm reset	Cause and solution
ME Module Error	High	Unclearable	• Disconnect the ECG module from the base, place it on the charger to charge it, wait for a short period of time, then reconnect it, and check if the issue still exists. • If the issue still exists, contact the service personnel.
ECG Lead Off	Low	Sound/light cleared	**Check the connection of the ECG electrodes.**
ECG XX Lead Off	**Low**	Sound/light cleared	The electrode has become detached from the animal or the lead wire has become disconnected from the adapter cable. Check the connections of the electrodes and leadwires.
ECG Noisy	**Low/Prompt**	Completely cleared	• **Inspect the connection of the ECG electrode pads and replace them with new ones if necessary.** • **Check leadwires for damage.** • **Ensure the patient is not obviously moving.** • **Check the filter setup**
ECG Calibrating	**Prompt**	/	/
ECG Learning	**Prompt**	/	ECG learning is manually or automatically triggered.
Cannot Analyze QT	**Prompt**	/	/
ECG Amplitude Too Small	**Low**	Unclearable	**Check patient condition.**
ECG Signal Invalid	**Low**	Completely cleared	• **Inspect the connection of the ECG electrode pads and replace them with new ones if necessary.** • **Clean the ECG electrode pads and the metal parts of the lead wires.** • **Clean the measurement sites.**
ME Battery Temperature Too High	**High**	Unclearable	The battery temperature of the ECG module is high. Replace the battery.
ME Battery Aged	**Low**	Unclearable	The battery of the ECG module reaches its lifetime. Contact the Customer Service Department or your local distributor.
ME Battery Error	**High**	Unclearable	The battery of the ECG module encounters communication error. Contact the Customer Service Department or your local distributor.
ME Low Battery	**Med**	Unclearable	**Low battery on the ECG module. Please charge it promptly.**

Alarm messages	Default priority	Indication on alarm reset	Cause and solution
ME Battery Depleted	**High**	Unclearable	**The ECG module battery is about to be depleted. Please charge it immediately.**

SpO_2 Technical Alarm Messages

Alarm messages	Default priority	Indication on alarm reset	Cause and solution
MS Disconnected	**Low**	Unclearable	The SpO_2 module lost Bluetooth connection with the R20. Check the SpO_2 module and R20 module. If needed, repair them.
MS Error	**High**	Unclearable	• **Disconnect the SpO2 module from the base unit, place it on the charger and charge it, wait for a short period of time, and then reconnect the SpO2 module to the base unit to check if the issue persists.** • **If the issue still exists, contact the service personnel.**
SpO2 Sensor Off	**Low**	Sound/light cleared	• **Check sensor application.** • **Check the connection between the pulse oximeter sensor and the module interface.**
SpO2 Searching Pulse	**Prompt**	Unclearable	• **Check sensor application.** • **Reposition the sensor if necessary.**
SpO2 Low Perfusion	**Prompt**	Unclearable	• **Check sensor application.** • **Reposition the sensor if necessary.** • **Check the patient for signs of low perfusion (hypotension, hypovolemia, vasoconstriction, etc.).**
SpO2 No Pulse	**Low**	Unclearable	• **Check sensor application.** • **Reposition the sensor if necessary.**
SpO2 Excess Light	**Low**	Unclearable	• **Check sensor application.** • **Cover the SpO2 sensor.**
MS Battery Temperature Too High	**High**	Unclearable	The battery temperature of the SpO_2 module is high. Replace the battery.
MS Battery Aged	**Low**	Unclearable	The battery of the SpO_2 module reaches its lifetime. Contact the Customer Service Department or your local distributor.
MS Battery Error	**High**	Unclearable	The battery of the SpO_2 module encounters communication error. Contact the Customer Service Department or your local distributor.

Alarm messages	Default priority	Indication on alarm reset	Cause and solution
MS Low Battery	**Med**	Unclearable	**Low battery on the SpO2 module. Please charge it promptly.**
MS Battery Depleted	**High**	Unclearable	**The battery of the SpO2 module is about to deplete. Please charge it immediately.**

Resp Technical Alarm Messages

Alarm messages	Default priority	Indication on alarm reset	Cause and solution
Resp Interference	**Prompt**	/	**Interference may be caused by the following factors: movement, poor electrode connection, other forms of electromagnetic interference, etc.**
LA-RA Electrode Poor Contact, LL-RA Electrode Poor Contact	**Prompt**	/	• **Check the placement of the ECG electrodes and avoid placing them on bony prominences.** • **Switch the Resp lead on the Resp menu.**

Temp Technical Alarm Messages

Alarm messages	Default priority	Indication on alarm reset	Cause and solution
Temp Low Battery	**Med**	Unclearable	**Low battery in the Temp Module. Please replace the battery promptly.**

NIBP Technical Alarm Messages

Alarm messages	Default priority	Indication on alarm reset	Cause and solution
NIBP Module Error	**High**	Unclearable	• **Please restart the NIBP module and check if the issue persists.** • **If the issue still exists, contact the service personnel.**
NIBP Cuff Loose	**Low**	Completely cleared	• **Choose a cuff with proper size.** • **Check whether the cuff, hose, and connection are leaking.** • **Ensure that the INDEX LINE on the cuff edge falls within the range markings on the cuff. Place the cuff with proper tightness.**

Alarm messages	Default priority	Indication on alarm reset	Cause and solution
NIBP Cuff or Airway Leak	**Low**	Completely cleared	• **Check the NIBP cuff and tubing for leakages.** • **Replace NIBP cuff and tubing.** • **Restart an NIBP measurement.** • **If the issue still exists, contact the service personnel.**
NIBP Excessive Motion	**Low**	Completely cleared	• **Ensure the patient keeps their limb still during the NIBP measurement.** • **Restart an NIBP measurement.**
NIBP Airway Error	**Low**	Completely cleared	**Check the air tubing for kinking.**
NIBP Weak Signal	**Low**	Completely cleared	• **Check the patient. Make sure that application site is not edematous.** • **Check the cuff is not loosen or detached.**
NIBP Cuff Overpressure	**Low**	Completely cleared	**Make sure there is no external pressure against the cuff.**
NIBP Overrange	**Low**	Completely cleared	• **Ensure the patient is not obviously moving.** • **Make sure there is no external pressure against the cuff.**
NIBP Timeout	**Low**	Completely cleared	• **Check the cuff is not loosen or detached.** • **Ensure the patient is not obviously moving.**
NIBP Airway Leak	**Low**	Completely cleared	**Check whether the cuff, hose, and connection are leaking.**
MB Battery Temperature Too High	**High**	Unclearable	The battery temperature of the SpO_2 module is high. Replace the battery.
MB battery aged. Replace the battery.	**Low**	Unclearable	The battery of the SpO_2 module reaches its lifetime. Contact the Customer Service Department or your local distributor.
MB Battery Error	**High**	Unclearable	The battery of the NIBP module encounters communication error. Contact the Customer Service Department or your local distributor.
MB Low Battery	**Med**	Unclearable	**NIBP module has low battery. Please charge it promptly or replace the battery.**
MB Battery Depleted	**High**	Unclearable	**NIBP module battery is about to be depleted. Please replace the battery immediately.**

R20 Module Technical Alarm Messages

Alarm messages	Default priority	Indication on alarm reset	Cause and solution
Receiver Error	**High**	Unclearable	• **Please reinsert the wireless receiver module.** • **If the issue still exists, contact the service personnel.**

Other Technical Alarms

Alarm messages	Default priority	Indication on alarm reset	Cause and solution
XX Measurement has been closed (XX refers to the module label)	**Prompt**	/	The parameter module is disabled. Switch on the module if you want to use it.
The display setup for XX is disabled. (XX refers to the parameter label)	**Prompt**	/	Select a desired area to display the parameter numerics and waveforms.

D.2 Infusion Module Alarm Messages

Infusion Pump

Alarm messages	Default priority	Cause and solution
Infusion Near Done	**Low**	During infusion, when the remaining VTBI is less than or equal to the set alarm time, the **Infusion Near Done** alarm is triggered. The alarm will be automatically cleared when infusion is completed.
Pump Reminder	**Low**	No operation is detected after the preset reminder time is reached, the **Reminder Time** alarm is triggered. Press (**Alarm Reset**) button or open the pump door.
Parameter not confirmed	**Low**	On the infusion parameter setting screen, on-line titration screen, bolus setting screen, and purge setting screen, **Parameter not confirmed** is triggered when parameters are in editable status and no operation is performed for 10 seconds. Press (**Alarm Reset**) button to clear the alarm.

Alarm messages	Default priority	Cause and solution
Pump Door Open	**High**	The **Pump Door Open** alarm is triggered when door opens during infusion. The alarm is cleared automatically after the pump door is closed.
Air in Line	**High**	During infusion, the **Air in Line** alarm is triggered when the bubble sensor detects that the size of a single bubble is larger than the threshold of a single bubble. Press (**Alarm Reset**) button to clear the alarm.
Accumulated Bubble	**High**	During infusion, the **Accumulated Bubble** alarm is triggered when the bubble sensor detects that the accumulated bubbles reach the threshold of the accumulated bubble within 1 hour. Press (**Alarm Reset**) button to clear the alarm.
Downstream Occlusion	**High**	During infusion, the **Downstream Occlusion** alarm is triggered when the occlusion pressure of the pipeline (between the pimp and the animal) reaches the set threshold. • The alarm is automatically cleared when the occlusion restarts successfully. • Manually remove the tube occlusion, make the pressure within the threshold range, and press (**Alarm Reset**) button to clear the alarm.
Infusion completed	**High**	The **Infusion completed** alarm is triggered when the preset VTBI is completed. Press (**Alarm Reset**) button to clear the alarm.
KVO Complete	**High**	The **KVO Complete** alarm is triggered when the KVO infusion is running for 30 minutes. Press (**Alarm Reset**) button to clear the alarm.

Alarm messages	Default priority	Cause and solution
System Error 1001	**High**	When the device detects a motor error or an internal error of the device, the **System Error** alarm is triggered and the system error code is displayed. Press (**Alarm Reset**) button to clear the alarm.
System Error 1002		
System Error 1003		
System Error 1004		
System Error 1005		
System Error 1006		
System Error 1007		
System Error 1008		
System Error 1009		
System Error 1010		
System Error 1011		
System Error 1012		
System Error 1013		

Warmer Module

Alarm messages	Default priority	Cause and solution
System Error 2001	**Med**	**Abnormal infusion temperature detection sensor.** **Restart the device; if the issue persists, contact the service personnel.**
System Error 2002	**High**	**Infusion temperature control has stopped working.** • **Please promptly remove the infusion set from the warmer.** • **Restart the device; if the issue persists, contact the service personnel.**
System Error 2003	**Med**	**Infusion warming control is not functioning properly.** **Restart the device; if the issue persists, contact the service personnel.**

Alarm messages	Default priority	Cause and solution
System Error 2004	High	Infusion temperature control has stopped working. • Please promptly remove the infusion set from the warmer. • Restart the device; if the issue persists, contact the service personnel.
Infusion Temperature Too High	High	• Please promptly remove the infusion set from the warmer and inspect the infusion solution. If necessary, discontinue the infusion. • Verify the infusion pump mode selection. • Verify if the ambient temperature is too high.

D.3 Environment Module Alarm Messages

Air Temperature

Alarm messages	Default priority	Cause and solution
Air Temperature Too High	High	All environmental control systems have stopped functioning. • Immediately evacuate the patient from the chamber and check their condition. • Open the hatch for ventilation. • Restart the device; if the issue persists, contact the service personnel.
Air Temperature Too Low	Med	• Check whether the ambient temperature outside the cabin is too low. • Check whether the operation window is open.
Air Temperature High	Low	• Check whether the ambient temperature outside the cabin is too high. • Check whether the equipment is exposed to sunlight.
Air Temperature Not Reaching Target for Long Time	Low	• Check whether the operation window is open. • Check whether the external environmental temperature is too high or too low. • Check whether the equipment is exposed to sunlight. • Clean the dust-proof mesh at the internal circulation duct.
System Error 3001	High	Oxygen (O2), air temperature, and humidity control have stopped working. • Immediately evacuate the patient from the chamber and check their condition. • Restart the device; if the issue persists, contact the service personnel.

Alarm messages	Default priority	Cause and solution
System Error 3002	High	Oxygen (O2), air temperature, and humidity control have stopped working. • Immediately evacuate the patient from the chamber and check their condition. • Restart the device; if the issue persists, contact the service personnel.
System Error 3003	High	Oxygen (O2), air temperature, and humidity control have stopped working. • Clean the dust-proof mesh at the internal circulation duct. • Check whether the top ventilation port of the compartment is blocked. • Restart the device; if the issue persists, contact the service personnel.
System Error 3004	High	Oxygen (O2), air temperature, and humidity control have stopped working. • Clean the dust-proof mesh at the internal circulation duct. • Check whether the top ventilation port of the compartment is blocked. • Restart the device; if the issue persists, contact the service personnel.
System Error 3005	Med	• Clean the dust-proof mesh at the internal circulation duct. • Check whether the top ventilation port of the compartment is blocked. • Restart the device; if the issue persists, contact the service personnel.
System Error 3006	Med	• Clean the dust-proof mesh at the internal circulation duct. • Check whether the top ventilation port of the compartment is blocked. • Restart the device; if the issue persists, contact the service personnel.
System Error 3007	High	Restart the device; if the issue persists, contact the service personnel.
System Error 3008	High	Restart the device; if the issue persists, contact the service personnel.
System Error 3009	Low	Restart the device; if the issue persists, contact the service personnel.
System Error 3010	High	Restart the device; if the issue persists, contact the service personnel.
System Error 3011	High	Restart the device; if the issue persists, contact the service personnel.
System Error 3012	Med	Restart the device; if the issue persists, contact the service personnel.

Alarm messages	Default priority	Cause and solution
System Error 3013	Med	Restart the device; if the issue persists, contact the service personnel.
System Error 4001	Med	Restart the device; if the issue persists, contact the service personnel.
System Error 4002	Med	• Clean the dust-proof mesh 1/dust-proof mesh 2 at the A/C. • Verify whether the distance between the air conditioning unit and the wall meets the requirements. • Restart the device; if the issue persists, contact the service personnel.
System Error 4003	Med	• Clean the dust-proof mesh 1/dust-proof mesh 2 at the A/C.. • Verify whether the distance between the air conditioning unit and the wall meets the requirements. • Restart the device; if the issue persists, contact the service personnel.
System Error 4004	Med	• Clean the dust-proof mesh 1/dust-proof mesh 2 at the A/C. • Verify whether the distance between the air conditioning unit and the wall meets the requirements. • Restart the device; if the issue persists, contact the service personnel.
System Error 4005	Med	• Clean the dust-proof mesh 1/dust-proof mesh 2 at the A/C. • Verify whether the distance between the air conditioning unit and the wall meets the requirements. • Restart the device; if the issue persists, contact the service personnel.
System Error 4006	Med	• Clean the dust-proof mesh 1/dust-proof mesh 2 at the A/C. • Verify whether the distance between the air conditioning unit and the wall meets the requirements. • Restart the device; if the issue persists, contact the service personnel.

Floor Temperature

Alarm messages	Default priority	Cause and solution
Floor Temperature Too High	High	• Immediately evacuate the patient from the chamber and check their condition. • Check the floor to see if there are other heat sources placed on it. • Restart the device; if the issue persists, contact the service personnel.

Alarm messages	Default priority	Cause and solution
Floor Temperature High	Low	Check the floor to see if there are other heat sources placed on it.
System Error 6001	Med	Restart the device; if the issue persists, contact the service personnel.
System Error 6002	Med	Restart the device; if the issue persists, contact the service personnel.
Floor Temperature Not Reaching Target for Long Time	Low	• Check whether other heat sources/cold sources are placed on the floor. • Check whether there is a significant difference between the setpoints of air temperature and floor temperature. • Clean the dust-proof mesh at the floor duct.
System Error 6003	High	Restart the device; if the issue persists, contact the service personnel.
System Error 6004	High	Restart the device; if the issue persists, contact the service personnel.
System Error 6007	Med	• Clean the dust-proof mesh at the floor duct. • Restart the device; if the issue persists, contact the service personnel.
System Error 6008	Med	• Clean the dust-proof mesh at the floor duct. • Restart the device; if the issue persists, contact the service personnel.
System Error 6009	Med	• Clean the dust-proof mesh at the floor duct. • Restart the device; if the issue persists, contact the service personnel.
System Error 6010	Med	• Clean the dust-proof mesh at the floor duct. • Restart the device; if the issue persists, contact the service personnel.
System Error 6011	High	• Clean the dust-proof mesh at the floor duct. • Restart the device; if the issue persists, contact the service personnel.
System Error 6012	High	• Clean the dust-proof mesh at the floor duct. • Restart the device; if the issue persists, contact the service personnel.
System Error 6013	High	• Clean the dust-proof mesh at the floor duct. • Restart the device; if the issue persists, contact the service personnel.
System Error 6014	High	• Clean the dust-proof mesh at the floor duct. • Restart the device; if the issue persists, contact the service personnel.
System Error 6015	High	Restart the device; if the issue persists, contact the service personnel.
System Error 6016	High	Restart the device; if the issue persists, contact the service personnel.

Alarm messages	Default priority	Cause and solution
System Error 6017	High	Restart the device; if the issue persists, contact the service personnel.
System Error 6018	High	Restart the device; if the issue persists, contact the service personnel.

Humidity

Alarm messages	Default priority	Cause and solution
Humidity Too High	Med	• Activate the ventilation function or open the cabin door for ventilation. • Reduce liquid in the cabin, such as water, urine, etc. • Check whether the humidity in the external environment is too high.
Humidity Too Low	Med	Check whether the humidity in the external environment is too low.
System Error 5001	High	Restart the device; if the issue persists, contact the service personnel.
System Error 5002	High	Restart the device; if the issue persists, contact the service personnel.
System Error 5003	Med	• Clean the dust-proof mesh at the dehumidifier. • Check if the ventilation port on the back cover of the device is blocked by foreign objects. • Restart the device; if the issue persists, contact the service personnel.
System Error 5004	High	• Clean the dust-proof mesh at the dehumidifier. • Check if the ventilation port on the back cover of the device is blocked by foreign objects. • Restart the device; if the issue persists, contact the service personnel.

Water Tank

Alarm messages	Default priority	Cause and solution
Water Tank Short of Water	Low	• Please refill the water tank with distilled water. • Clean water tank filter. • If the issue still exists, contact the service personnel.
Dehumidbox Full	Med	• Please perform the condensate drainage procedure. • If the issue still exists, contact the service personnel.
ColdBox Full	Med	• Please perform the condensate drainage procedure. • If the issue still exists, contact the service personnel.

Alarm messages	Default priority	Cause and solution
Descaling interrupted	Med	• Check if the water tank has not been filled with the required amount of lemon acid solution or clean water. • Check if there was an abnormal alarm during the descaling process. • Clean water tank filter. • If the issue persists after re-running the descaling procedure, contact the service personnel.
Water Tank Not In Position	Prompt	/
Please remove the scale from the water tank.	Prompt	• The descaling reminder time has arrived. Please execute the descaling procedure. • If the descaling procedure has been executed, you can select "System" > "Environment Maintenance" > "Water Tank" to update "Last Cleaning Time" or adjust "Reminder Cycle".
System Error 5005	Med	• Check the drainage tubing for bends or obstructions. • Check if the drainage tubing is higher than the drainage port. • Restart the device; if the issue persists, contact the service personnel.
System Error 5006	High	Restart the device; if the issue persists, contact the service personnel.
System Error 5007	Med	• Try to execute the descaling procedure. • Restart the device; if the issue persists, contact the service personnel.
System Error 5008	Med	Restart the device; if the issue persists, contact the service personnel.
System Error 5009	Med	• Clean the dust-proof mesh at the dehumidifier. • Restart the device; if the issue persists, contact the service personnel.

Oxygen Control

Alarm messages	Default priority	Cause and solution
O2 Concentration Too Low	High	• Immediately evacuate the patient from the chamber and check their condition. • Check the oxygen source or oxygen supply lines.
O2 Concentration Not Reaching Target for Long Time	Low	• Check whether the operation window is open. • Check the oxygen supply capacity of the oxygen source.
O2 Concentration Too High for Long Time	Med	• Open the hatch for ventilation. • Adjust the target O2 value or the alarm threshold.

Alarm messages	Default priority	Cause and solution
Oxygen Source Error	**Med/Prompt**	• **Check if the oxygen source is turned on or if the oxygen tank is empty.** • **Check if the oxygen source is abnormal.** • **Check the oxygen tubing connections.**
Oxygen Flow Error	**Med**	• **Check if the oxygen flow rate is properly set.** • **Check for leaks in the oxygen tubing.**
System Error 7002	**Med**	**Restart the device; if the issue persists, contact the service personnel.**
System Error 7003	**Med**	**Restart the device; if the issue persists, contact the service personnel.**
System Error 7004	**Med**	**Restart the device; if the issue persists, contact the service personnel.**
System Error 7005	**Med**	• **Check if the ventilation port on the back cover of the device is blocked by foreign objects.** • **Restart the device; if the issue persists, contact the service personnel.**
System Error 7006	**High**	**Restart the device; if the issue persists, contact the service personnel.**
System Error 7007	**Med**	**Restart the device; if the issue persists, contact the service personnel.**
System Error 7008	**Med**	**Restart the device; if the issue persists, contact the service personnel.**
Please perform O_2 sensor calibration	**Prompt**	The oxygen sensor calibration reminder date is reached. Perform the oxygen sensor calibration procedure.

CO_2

Alarm messages	Default priority	Cause and solution
CO2 Concentration Too High for Long Time	**Med**	• **Check if the CO2 absorbent has failed and replace it promptly.** • **Adjust the CO2 alarm setpoint.** • **Clean the dust-proof mesh at the CO2 duct.** • **Clean the sponge filter inside the CO2 absorber canister.** • **Execute CO2 calib zero function.**
CO2 Absorber Canister Not In Position	**Prompt**	/
Please perform CO_2 sensor calibration	**Prompt**	The CO_2 sensor calibration reminder date is reached. Perform the CO_2 sensor calibration procedure.
Emergency Valve 1 Error	**High**	• **Verify the distance between the equipment's rear panel and the wall meets the requirements.** • **Check the emergency vent for foreign object blockage.**

Alarm messages	Default priority	Cause and solution
Emergency Valve 2 Error	High	• Verify the distance between the equipment's rear panel and the wall meets the requirements. • Check the emergency vent for foreign object blockage.
System Error 7011	Med	Restart the device; if the issue persists, contact the service personnel.
System Error 7012	Med	Restart the device; if the issue persists, contact the service personnel.
System Error 7013	High	Restart the device; if the issue persists, contact the service personnel.
System Error 7014	High	Restart the device; if the issue persists, contact the service personnel.
System Error 7015	Med	Restart the device; if the issue persists, contact the service personnel.
System Error 7016	Low	• Clean the dust-proof mesh at the CO2 duct. • If the issue still exists, contact the service personnel.
System Error 7017	Med	Restart the device; if the issue persists, contact the service personnel.
System Error 7018	Med	Restart the device; if the issue persists, contact the service personnel.
System Error 7019	Med	Restart the device; if the issue persists, contact the service personnel.

Others

Alarm messages	Default priority	Cause and solution
System Error 8001	High	Restart the device; if the issue persists, contact the service personnel.
System Error 8002	High	Restart the device; if the issue persists, contact the service personnel.
System Error 8015	Med	Restart the device; if the issue persists, contact the service personnel.

D.4 System Technical Alarm Messages

Cabin Door Technical Alarm Messages

Alarm messages	Default priority	Cause and solution
Door Open	Prompt	Close the cabin door.
System Error 8016	High	Check the door frame for foreign objects lodged in it. Restart the device; if the issue persists, contact the service personnel.

Alarm messages	Default priority	Cause and solution
System Error 8017	High	Check the door frame for foreign objects lodged in it. Restart the device; if the issue persists, contact the service personnel.
System Error 8018	High	Restart the device; if the issue persists, contact the service personnel.

Power Technical Alarm Messages

Alarm messages	Default priority	Cause and solution
No AC Power	High	• Check the power connection. • Check if the circuit breaker has tripped.
Low Battery	Low	Please connect to the power supply as soon as possible.
Critically Low Battery	High	The device is about to shut down due to battery depletion. Please connect to a power source promptly.
No Battery	Med	Please contact the service personnel.

Other Technical Alarm Messages

Alarm messages	Default priority	Cause and solution
Reboot due to system error	High	Restart the device; if the issue persists, contact the service personnel.
System Error 8004	High	
System Error 8005	High	
System Error 8006	Low	
System Error 8007	High	
System Error 8008	Low	
System Error 8009	High	
System Error 8010	High	
System Error 8012	High	
System Error 8013	High	
System Error 8014	High	

Alarm messages	Default priority	Cause and solution
Storage Error	**High**	The storage card fails or files are damaged. Restart the device to format the storage card. If the alarm persists, contact the Customer Service Department or your local distributor.
Loading Default Config Failed	**Low**	The default configuration is not correctly loaded. The device will restore to the factory default configuration for the current species.
The patient data storage space is nearly full. Please delete some discharged patients.	**Med/Low/Prompt** Configurable	The animal data storage space is nearly full. Please delete some discharged animals.

Network Technical Alarm Messages

Alarm messages	Default priority	Cause and solution
Network is disconnected. Please check.	**Low**	Check the network connection.
WLAN IP Address Conflict	**Low**	Check the network settings.
LAN1 IP Address Conflict	**Low**	Check the network settings.
Fail To Get WLAN IP Address	**Low**	Unable to automatically obtain the wireless network IP address. Check the network settings.
Fail To Get LAN1 IP Address	**Low**	Unable to automatically obtain the wired network LAN1 IP address. Check the network settings.

Printer Technical Alarm Messages

Alarm messages	Default priority	Cause and solution
Printer Buffer Full	**Prompt**	The printer buffer is full. Wait till the printer finishes the printing task.
Cached Report Printing Failed	**Prompt**	The printer runs out of paper or cannot be connected. Check the printer.
Printing Stopped	**Prompt**	Printing is manually stopped.
Printer Unavailable	**Prompt**	The printer may fail. Check the printer.
PDF storage space is nearly full	**Prompt**	Delete the files saved under the PDF file path to release storage space. Otherwise, you cannot save new PDF files.

Alarm messages	Default priority	Cause and solution
Error storing PDF file	**Prompt**	The PDF file path settings on the printer server and the PDFCreator are not consistent or the PDF storage space is full. Check the PDF file path settings for consistency, or delete the files saved under the PDF file path to release storage space.
Please ensure the language settings of the print server and this cabin are consistent.	**Prompt**	Verify that the language settings of the printer server and the device are consistent. Otherwise, you cannot perform printing.
Print Server Disconnected	**Prompt**	Check that the device is properly connected with the printer server.

E Default Settings

E.1 Monitoring Default Settings

E.1.1 ECG Default Settings

Item		Default Settings
HR/PR	Alarm switch (On/Off)	**On**
	High limit	**Canine**: 170bpm
		Feline: 220bpm
		Other: 170bpm
	Low limit	**Canine**: 50bpm
		Feline: 120bpm
		Other: 50bpm
	Alarm Priority	**Med**
	Alarm Outputs	**Off**
Extreme Tachy	Alarm switch (On/Off)	**On**
	High limit	**Canine**: 190bpm
		Feline: 240bpm
		Other: 190bpm
	Alarm Priority	**High**
	Alarm Outputs	**Off**
Extreme Brady	Alarm switch (On/Off)	**On**
	Low limit	**Canine**: 35bpm
		Feline: 100bpm
		Other: 35bpm
	Alarm Priority	**High**
	Alarm Outputs	**Off**

Item	Default Settings
Alarm Source	**Auto**
Speed	**25 mm/sec**
Filter	**Monitor**
Notch Filter	**On**
Lead Set	**Auto**
Measurement Site	**Chest Lead**
CrozFusion	**On**
Display CrozFusion	**Off**
ECG Gain	x2
QRS Volume	2
QRS Threshold	0.16mV
Pace	**No**

E.1.2 ST Default Settings

Item		Default Settings
ST-I	Alarm switch (On/Off)	**Off**
	High limit	0.2mV
	Low limit	-0.2mV
	Alarm Priority	**Med**
	Alarm Outputs	**Off**
ST-II	Alarm switch (On/Off)	**Off**
	High limit	0.2 mV
	Low limit	-0.2 mV
	Alarm Priority	**Med**
	Alarm Outputs	**Off**
ST-III	Alarm switch (On/Off)	**Off**
	High limit	0.2 mV
	Low limit	-0.2 mV
	Alarm Priority	**Med**
	Alarm Outputs	**Off**
ST Single	Alarm switch (On/Off)	**Off**
	High limit	0.1 mV
	Low limit	-0.1 mV
	Alarm Priority	**Med**
	Alarm Outputs	**Off**

Item		Default Settings
ST Dual	Alarm switch (On/Off)	**Off**
	High limit	0.1 mV
	Low limit	-0.1 mV
	Alarm Priority	**Med**
	Alarm Outputs	**Off**
ST Alarm Mode		**Absolute**

E.1.3 Arrhythmia Default Settings

Arrhythmia Alarm Default Settings

Item		Default Settings
Asystole	Alarm switch (On/Off)	**On**
	Alarm Priority	**High**
	Alarm Outputs	**Off**
V-Fib/V-Tach	Alarm switch (On/Off)	**On**
	Alarm Priority	**High**
	Alarm Outputs	**Off**
V-Tach	Alarm switch (On/Off)	**On**
	Alarm Priority	**High**
	Alarm Outputs	**Off**
Vent Brady	Alarm switch (On/Off)	**On**
	Alarm Priority	**High**
	Alarm Outputs	**Off**
Extreme Tachy	Alarm switch (On/Off)	**On**
	Alarm Priority	**High**
	Alarm Outputs	**Off**
Extreme Brady	Alarm switch (On/Off)	**On**
	Alarm Priority	**High**
	Alarm Outputs	**Off**
R on T	Alarm switch (On/Off)	**Off**
	Alarm Priority	**Med**
	Alarm Outputs	**Off**
Run PVCs	Alarm switch (On/Off)	**Off**
	Alarm Priority	**Low**
	Alarm Outputs	**Off**

Item		Default Settings
Couplet	Alarm switch (On/Off)	**Off**
	Alarm Priority	**Prompt**
	Alarm Outputs	**Off**
Multiform PVC	Alarm switch (On/Off)	**Off**
	Alarm Priority	**Med**
	Alarm Outputs	**Off**
PVC	Alarm switch (On/Off)	**Off**
	Alarm Priority	**Prompt**
	Alarm Outputs	**Off**
Bigeminy	Alarm switch (On/Off)	**Off**
	Alarm Priority	**Med**
	Alarm Outputs	**Off**
Trigeminy	Alarm switch (On/Off)	**Off**
	Alarm Priority	**Med**
	Alarm Outputs	**Off**
Tachy	Alarm switch (On/Off)	**Off**
	Alarm Priority	**Med**
	Alarm Outputs	**Off**
Brady	Alarm switch (On/Off)	**Off**
	Alarm Priority	**Med**
	Alarm Outputs	**Off**
Pacer Not Capture	Alarm switch (On/Off)	**Off**
	Alarm Priority	**Prompt**
	Alarm Outputs	**Off**
Pacer Not Pacing	Alarm switch (On/Off)	**Off**
	Alarm Priority	**Prompt**
	Alarm Outputs	**Off**
Missed Beat	Alarm switch (On/Off)	**Off**
	Alarm Priority	**Prompt**
	Alarm Outputs	**Off**
Nonsus V-Tach	Alarm switch (On/Off)	**Off**
	Alarm Priority	**Med**
	Alarm Outputs	**Off**
Vent Rhythm	Alarm switch (On/Off)	**Off**
	Alarm Priority	**Med**
	Alarm Outputs	**Off**

Item		Default Settings
Pause	Alarm switch (On/Off)	**Off**
	Alarm Priority	**Low**
	Alarm Outputs	**Off**
Irr Rhythm	Alarm switch (On/Off)	**Off**
	Alarm Priority	**Prompt**
	Alarm Outputs	**Off**
PVCs/min	Alarm switch (On/Off)	**Off**
	Alarm Priority	**Med**
	Alarm Outputs	**Off**
Pauses/min	Alarm switch (On/Off)	**Off**
	Alarm Priority	**Med**
	Alarm Outputs	**Off**
SVT	Alarm switch (On/Off)	**Off**
	Alarm Priority	**Med**
	Alarm Outputs	**Off**
SVCs/min	Alarm switch (On/Off)	**Off**
	Alarm Priority	**Med**
	Alarm Outputs	**Off**

Arrhythmia Threshold Default Settings

Item	Default Settings
Asystole Delay	5s
Extreme Tachy	**Canine**: 190bpm
	Feline: 240bpm
	Other: 190bpm
Tachy(HR High)	**Canine**: 170bpm
	Feline: 220bpm
	Other: 170bpm
Brady(HR Low)	**Canine**: 50bpm
	Feline: 120bpm
	Other: 50bpm
Extreme Brady	**Canine**: 35bpm
	Feline: 100bpm
	Other: 35bpm
Multif PVCs Window	15 **beats**
PVCs/min	10

Item	Default Settings
Pauses/min	8
Pause Threshold	2.0s
Irr Rhy End Time	**2 min**
SVT HR	**Canine**: 180bpm
	Feline: 240bpm
	Other: 180bpm
SVT SVCs	3 **beats**
SVCs/min	10
Refractory Period 1	**3 min**
Refractory Period 2	**10 min**

E.1.4 QT/QTc Default Settings

Item		Default Settings
QTc	Alarm switch (On/Off)	**Off**
	High limit	**Canine**: 240pm
		Feline: 200bpm
		Other: 240bpm
	Alarm Priority	**Med**
	Alarm Outputs	**Off**
ΔQTc	Alarm switch (On/Off)	**Off**
	High limit	40
	Alarm Priority	**Med**
	Alarm Outputs	**Off**
QT Analysis		**Off**
QT Leads		**All**

E.1.5 Respiration Default Settings

Item		Default Settings
RR	Alarm switch (On/Off)	**On**
	High limit	**Canine**: 40
		Feline: 45
		Other: 40
	Low limit	**Canine**: 8
		Feline: 12
		Other: 8
	Alarm Priority	**Med**
	Alarm Outputs	**Off**
Zero RR Delay	Alarm switch (On/Off)	**On**
	Alarm Priority	**High**
	Alarm Outputs	**Off**
RR Source		**Auto**
Resp Lead		II
Gain		x2
Speed		**6.25 mm/sec**
Auto Threshold Detection		**On**

E.1.6 SpO_2 Default Settings

Item		Default Settings
SpO2	Alarm switch (On/Off)	**On**
	High limit	100%
	Low limit	95%
	Alarm Priority	**Med**
	Alarm Outputs	**Off**
SpO2 Desat	Alarm switch (On/Off)	**On**
	Low limit	85%
	Alarm Priority	**High**
	Alarm Outputs	**Off**
NIBP Simul		**Off**
Sensitivity		**Med**
Display PI		**Off**
Speed		25 mm/s

Item		Default Settings
PR	Alarm switch (On/Off)	**On**
	High limit	**Canine**: 170bpm
		Feline: 220bpm
		Other: 170bpm
	Low limit	**Canine**: 50bpm
		Feline: 120bpm
		Other: 50bpm
	Alarm Priority	**Med**
	Alarm Outputs	**Off**
	Alarm Source	**Auto**
	PR Source	**Auto**
	QRS Volume	2
	Display PR	**Off**

E.1.7 Temperature Default Settings

Item		Default Settings
Rectal	Alarm switch (On/Off)	**On**
	High limit	**Canine**: 39.5
		Feline: 40.0
		Other: 39.5
	Low limit	36.7
	Alarm Priority	**Med**
	Alarm Outputs	**Off**
Temperature channel (T3) label		**Rectal**

E.1.8 NIBP Default Settings

Item		Default Settings
NIBP-S	Alarm switch (On/Off)	**On**
	High limit	170 mmHg
	Low limit	90 mmHg
	Alarm Priority	**Med**
	Alarm Outputs	**Off**

Item		Default Settings
NIBP-D	Alarm switch (On/Off)	**On**
	High limit	110 mmHg
	Low limit	45 mmHg
	Alarm Priority	**Med**
	Alarm Outputs	**Off**
NIBP-M	Alarm switch (On/Off)	**On**
	High limit	130 mmHg
	Low limit	60 mmHg
	Alarm Priority	**Med**
	Alarm Outputs	**Off**
Initial Pressure		Weight range >23 kg: 160 Weight range 10 kg to 23 kg: 140 Weight range <10 kg: 140
Time Between Readings		15 min
Start Mode		**Time Between Readings**
NIBP End Tone		**Off**
Venipuncture Pressure		**Auto**
Display Format		**Sys/Dia(Mean)**
Display Alarm Limits		**Off**
Display PR		**Off**

E.1.9 Review Default Settings

Item		Default Settings
Tabular Trends	**Trend Group**	**Standard**
	Interval	**30 min**
Graphic Trends	**Trends**	5
	Trend Group	**Standard**
	Zoom	8h
Event	**Filter**	**All**
	Beat Anno:	**Off**
	Speed	25 mm/s
	ECG Gain	x2

Item		Default Settings
Full Disclosure	**Display(Maximum: 3)**	II
	Scale	x1
	Duration	1 min
	Beat Anno:	**Off**
	Speed	25 mm/s
	ECG Gain	x1

E.1.10 Report Default Settings

Item		Default Settings
Tabular Trends Report	**Resolution**	**30 min**
	Report Format	**Landscape**
	Trend Group	**Standard**
Graphic Trends Report	**Trend Group**	**Standard**
Realtime Report	**Speed**	**Auto**
	Select Waveform	**Current Waveforms**

E.2 Infusion Default Settings

E.2.1 Infusion Control

Item	Default Settings
Occlusion Pressure	600 mmHg
Bubble Size	**100 µl**
Accumulated Bubble	1.5 ml/h
KVO Rate	0.5 ml/h
Auto Bolus Limit	50 ml
Manual Bolus Limit	**3 ml**
Time Near End	**3 min**
Reminder Time	**2 min**

E.2.2 Heating Control

Item	Default Settings
Pump	**Built-in Pump**

Item	Default Settings
Target Temperature	38.0℃
Intelligent Flow-Linked Heating	**On**

E.2.3 Environment Default Settings

Item	Default Settings
CO2	<2000
Smart Adjustment Prompts	**On**
Anion	30 min
CO2 Automatic Ventilation Alarm Limit	• ViCare U7L/ViCare U7R: 3000ppm • ViCare U7: 4000ppm
High O2 Alarm Limit (Concentration)	60%
High O2 Alarm Limit (Duration)	**24 hrs**

E.3 System Default Settings

E.3.1 Audio and Display

Item	Default Settings
Alarm Volume	2
High Alarm Volume	**Alarm Volume**+3
QRS Volume	2
Key Volume	2
Reminder Volume	2
Brightness	5
Brightness On Battery	1
Date Format	yyyy-mm-dd
24-Hour Time	**On**
Daylight Savings Time	**Off**
Auto Screen Lock Time	**Off**

E.3.2 Night Mode

Item	Default Settings
Brightness	1
All Mute	**Off**
Alarm Volume	2
QRS Volume	0
Key Volume	0
Reminder Volume	1
NIBP End Tone	**Off**
Stop NIBP	**Off**
Auto Night Mode	**Off**
Night Time Period	22:00-06:00

E.3.3 General Maintenance

Alarm Settings

Item		Default Settings
Audible	**Minimum Alarm Volume**	2
	Alarm Sound	ISO
	High Alarm Interval	3s
	Med Alarm Interval	8s
	Low Alarm Interval	20s
	Auto Increase Volume	**Lv 2**
	Increase Volume Delay	20s
Pause/Reset	**Pause**	**Alarm Pause**
	Pause Threshold	**2 min**
	Pause Priority	**All**
	Pause 5 min	**Off**
	Pause 10 min	**Off**
	Pause 15 min	**Off**
	Alarm Light	**On When Reset**
	Alarm Reset Reminder	**On**
	Alarm Off Reminder	**On**
	Reminder Interval	**5 min**

Item		Default Settings
Other	ECG Lead Off	Low
	SpO2 Sensor Off	Low
	CMS/eGW Disconnected	Low
	Alarm Delay	12 sec
	ST Alarm Delay	30 sec
	Lethal Arrhy Alarms Off	Disable
	SPO2 Desat Alarm Off	Disable
	Apnea Alarm Off	Disable
	Arrhy Shield Time	2 min
	CMS/eGW Disconnected Alarm	Off
	High Humidity Alarm	On
	Low Humidity Alarm	On
	Disable Night Mode	Off
	Notify Alarm Change	Off

Unit Settings

Item	Default Settings
Weight Unit	kg
Temp Unit	℃
ST Unit	mV
BP Unit	mmHg
Infusion Pressure Unit	mmHg
Gas Supply Pressure Unit	kPa

Timer Settings

Item		Default Settings
Time Synchronization	Start NTP Time Sync	Off
	Interval	1 hr
Daylight Savings Time	Auto Daylight Savings Time	Off

Other Settings

Item	Default Settings
Mouse Sensitivity	5
Clear CMS IP at startup	Off
Screenshot	Off
Manual Event Edit	On

Authorization Settings

Item	Default Settings
Automatic Logout Time	20s

E.3.4 Monitoring Maintenance

Item		Default Settings
ECG	ECG Standard	AHA
	QTc Formula	Hodges
	Notch Frequency	50 Hz
SpO2	SpO2 Tone	Mode 1
NIBP	NIBP Timeout	15 min
Other	Parameters On/Off Config Influenced	On
	Parameters On/Off Protected	Off
	Outline Font for Suspected Values	On

E.3.5 Infusion Maintenance

Item	Default Settings
Purge Limit	15 ml
Para. Memory	On
Block Restart	On
Brand Selection	On

E.3.6 Environment Maintenance

Item		Default Settings
Water Tank	Descaling Reminder	On
	Reminder Cycle	180 Days
CO2 Zero Calibration	CO2 Zero Calibration Reminder	On
	Reminder Cycle	30 Days
Other	Air Circulation State Changed Prompt	On
	Smart Fast O2 Mode	On

F Electrical Safety Inspection

The following electrical safety tests are recommended as part of a comprehensive preventive maintenance program. They are a proven means of detecting abnormalities that, if undetected, could prove dangerous to either the patient or the operator. Additional tests may be required according to local regulations.
All tests can be performed using commercially-available safety analyzer test equipment. These procedures assume the use of a 601PROXL International Safety Analyzer or equivalent safety analyzer. Other popular testers which comply with IEC 60601-1 and are used, such as Fluke, Metron or Gerb, may require modifications to the procedure. Follow the analyzer manufacturer's instructions.

An electrical safety inspection should be periodically performed 2 times every year. The safety analyzer is also an excellent troubleshooting tool for detecting abnormalities in line voltage and grounding, as well as total current loads.

NOTE

Make sure the safety analyzer is authorized and complies with the requirements of IEC 60601-1. Follow the analyzer manufacturer’s instructions.

F.1 Power Cord Plug

F.1.1 The Power Plug

Test Item		Acceptance Criteria
The power plug	The power plug pins	No broken or bent pins. No discolored pins.
	The plug body	No physical damage to the plug body.
	The strain relief	No physical damage to the strain relief. No plug warmth when device is in use.
	The power plug	No loose connections.

Test Item	Acceptance Criteria
The power cord	No physical damage to the cord. No deterioration to the cord.
	For devices with detachable power cords, inspect the connection with the device.
	For devices with non-detachable power cords, inspect the strain relief at the device.

F.2 Device Enclosure and Accessories

F.2.1 Visual Inspection

Test Item	Acceptance Criteria
The enclosure and accessories	No physical damage to the enclosure and accessories.
	No physical damage to meters, switches, connectors, etc.
	No residue of fluid spillage (e.g., water, coffee, chemicals, etc.).
	No loose or missing parts (e.g., knobs, dials, terminals, etc.).

F.2.2 Contextual Inspection

Test Item	Acceptance Criteria
The enclosure and accessories	No unusual noises (e.g., rattles inside the case).
	No unusual smells (e.g., burning or smoky smells, particularly from ventilation holes).
	No taped notes that may suggest device deficiencies or operator concerns.

F.3 Device Labeling

Check that the labels provided by the manufacturer or the healthcare facility are present and legible.

- Main unit label
- Integrated warning labels

F.4 Protective Earth Resistance

1. Plug the analyzer probes into the device's protective earth terminal and the protective earth terminal of the AC power cord.
2. Test the earth resistance with a current of 25 A.
3. Verify the resistance is less than the limits.

LIMITS

ALL COUNTRIES R = 0.2 Ω Maximum

F.5 Earth Leakage Test

Run an Earth Leakage test on the device being tested before performing any other leakage tests.

The following outlet conditions apply when performing the Earth Leakage test.

- normal polarity (Normal Condition).
- reverse polarity (Normal Condition).
- normal polarity with open neutral (Single Fault Condition).
- reverse polarity with open neutral (Single Fault Condition).

LIMITS

For IEC 60601-1:

- 500 µA in Normal Condition.
- 10 mA in Single Fault Condition.

F.6 Touch Current

The following outlet conditions apply when performing the Touch current test.

- normal polarity (Normal Condition).
- reverse polarity (Normal Condition).
- normal polarity with open neutral (Single Fault Condition).
- reverse polarity with open neutral (Single Fault Condition).
- normal polarity with open earth (Single Fault Condition).
- reverse polarity with open earth (Single Fault Condition).

LIMITS

For IEC 60601-1:

- 100 µA in Normal Condition.
- 500 µA in Single Fault Condition.

F.7 Patient Leakage Current

Patient leakage currents are measured between a selected applied part and mains earth. All measurements have a true RMS only.

The following outlet conditions apply when performing the Touch current test.

- normal polarity (Normal Condition).
- reverse polarity (Normal Condition).
- normal polarity with open neutral (Single Fault Condition).
- reverse polarity with open neutral (Single Fault Condition).

- normal polarity with open earth (Single Fault Condition).
- reverse polarity with open earth (Single Fault Condition).

LIMITS

For IEC 60601-1:

- For BF applied parts:
  - 100 µA in Normal Condition.
  - 500 µA in Single Fault Condition.
- For Defibrillation-Proof Type CF applied parts:
  - 10 µA in Normal Condition.
  - 50 µA in Single Fault Condition.
- For CF applied parts:
  - 10 µA in Normal Condition.
  - 50 µA in Single Fault Condition.

F.8 Mains on Applied Part Leakage

The Mains on Applied Part test applies a test voltage, which is 110% of the mains voltage using a limiting resistance, to selected applied part terminals. Current measurements are then taken between the selected applied part and earth. Measurements are taken with the test voltage (110% of mains) on applied parts in the normal and reverse polarity conditions.

The following outlet conditions apply when performing the Mains on Applied Part test.

- normal polarity.
- reverse polarity.

LIMITS

For IEC 60601-1:

- For BF applied parts: 5000 µA
- For Defibrillation-Proof Type CF applied parts: 50 µA
- For CF applied parts: 50 µA

F.9 Patient Auxiliary Current

Patient Auxiliary currents are measured between any selected Applied Part connector and the remaining Applied Part connectors. All measurements may have a true RMS response.

The following outlet conditions apply when performing the Patient Auxiliary Current test.

- normal polarity (Normal Condition).
- reverse polarity (Normal Condition).
- normal polarity with open neutral (Single Fault Condition).
- reverse polarity with open neutral (Single Fault Condition).
- normal polarity with open earth (Single Fault Condition).

- reverse polarity with open earth (Single Fault Condition).

LIMITS

For IEC 60601-1:

- For BF applied parts:
  - 100 µA in Normal Condition.
  - 500 µA in Single Fault Condition.
- For Defibrillation-Proof Type CF applied parts:
  - 10 µA in Normal Condition.
  - 50 µA in Single Fault Condition.
- For CF applied parts:
  - 10 µA in Normal Condition.
  - 50 µA in Single Fault Condition.

G Terms

Abbreviations	In Full
$AaDO_2$	alveolar-arterial oxygen gradient
ABD	apnea, brandycardia, SpO_2 desat
AC	alternating current
AG	anaesthesia gas
AHA	American Heart Association
Ao	aortic pressure
Art	arterial
ATMP	barometric pressure
awRR	airway respiratory rate
BAP	brachial arterial pressure
BOLUS	Bolus
BSA	body surface area
BT	blood temperature
btbHR	beat to beat heart rate
BTPS	body temperature and pressure, saturated
C.I.	cardiac index
C.O.	cardiac output
CaO_2	arterial oxygen content
CCU(CICU)	Cardiac Intensive Care Unit
CE	Conformité Européenne
CIS	Clinical Information System
CISPR	International Special Committee on Radio Interference
CMS	central monitoring system
CO_2	carbon dioxide
COHb	carboxyhemoglobin

Abbreviations	In Full
CPU	Central Processing Unit
CVP	central venous pressure
DC	Direct Current
DERS	Dose Error Reduction Systems
Des	desflurane
Dia	diastolic
DO_2	oxygen delivery
DO_2I	oxygen delivery index
dpi	dot per inch
DPS	Dynamic Pressure System
ECG	electrocardiograph
EDV	end-diastolic volume
EE	Energy Expenditure
EEC	European Economic Community
EMC	electromagnetic compatibility
EMG	electromyograph
EMI	Electromagnetic Interference
Enf	enflurane
ESU	electrosurgical unit
EtO	Ethylene oxide
FAP	femoral arterial pressure
FCC	Federal Communication Commission
FiO_2	fraction of inspired oxygen
Hal	halothane
Hb	hemoglobin
HR	heart rate
IABP	intra-aortic balloon pump
ICU	Intensive Care Unit
ID	Identification
IEC	International Electrotechnical Commission
IEEE	Institute of Electrical and Electronic Engineers
IP	internet protocol
IPS	individual parameter score
ISO	International Organization for Standardization
IV	Intravenous
KVO	Keep vein open

Abbreviations	In Full
LA	left foreleg
LAP	left atrial pressure
LCW	left cardiac work
LCWI	left cardiac work index
LDAP	Lightweight Directory Access Protocol
LED	Light Emitting Diode
LL	left hind leg
LVSW	left ventricular stroke work
LVSWI	left ventricular stroke work index
MAP	mean arterial pressure
Max	Maximum
Mb	Myoglobin
MetHb	methemoglobin
Min	Minimum
MLDAP	Mindray Animal Medical LDAP, Mindray Animal Medical Lightweight Directory Access Protocol
MRI	Magnetic Resonance Imaging
MV	minute volume
N/A	Not Applied
N_2O	nitrous oxide
NIBP	noninvasive blood pressure
O_2	oxygen
O_2%	oxygen concentration
OR	Operating Room
PA	pulmonary artery
pArt	artery pressure
PAWP	pulmonary artery wedge pressure
Pleth	plethysmogram
PPV	pulse pressure variation
PR	pulse rate
PVC	premature ventricular contraction
PVR	pulmonary vascular resistance
PVRI	pulmonary vascular resistance index
RA	right fore leg
RAP	right atrial pressure
Resp	respiration
RL	right hind leg

Abbreviations	In Full
RQ	respiratory quotient
RR	respiration rate
SaO_2	arterial oxygen saturation
SEF	spectral edge frequency
Sev	sevoflurane
SN	Series Number
SpO_2	arterial oxygen saturation from pulse oximetry
SQI	signal quality index
SV	stroke volume
SVI	stroke volume index
SvO_2	venous oxygen saturation
SVR	systemic vascular resistance
SVRI	systemic vascular resistance index
Sys	systolic pressure
TB	Blood Temperature
TD	temperature difference
Temp	temperature
TFC	thoracic fluid content
TI	injectate temperature
TV	tidal volume
UAP	umbilical arterial pressure
USB	Universal Serial Bus
UVP	umbilical venous pressure
VAC	volts alternating current
Vd/Vt	Deadspace to tidal volume ratio
Vdphy	Physiologic Deadspace
VI	velocity index
VO_2	oxygen consumption
VO_2I	oxygen consumption index
VTBI	Volume To Be Infused

H Declaration of Conformity

Hereby, Shenzhen Mindray Animal Medical Technology Co., Ltd. declares that the radio equipment type ViCare U7/ViCare U7L/ViCare U7R Veterinary Intensive Care Cabin is in compliance with Directive 2014/53/EU.

The full text of the declaration of conformity is available at the following Internet address:

Site Location	QR Code
https://ims.mindrayanimal.com/pub/detail.aspx?tid=14&rid=30357	

FCC Warning
This device complies with part 15 of the FCC Rules. Operation is subject to the following two conditions: (1) This device may not cause harmful interference, and (2) this device must accept any interference received, including interference that may cause undesired operation.

Note: This equipment has been tested and found to comply with the limits for a Class B digital device, pursuant to part 15 of the FCC Rules. These limits are designed to provide reasonable protection against harmful interference in a residential installation. This equipment generates, uses and can radiate radio frequency energy and, if not installed and used in accordance with the instructions, may cause harmful interference to radio communications. However, there is no guarantee that interference will not occur in a particular installation. If this equipment does cause harmful interference to radio or television reception, which can be determined by turning the equipment off and on, the user is encouraged to try to correct the interference by one or more of the following measures:
—Reorient or relocate the receiving antenna.
—Increase the separation between the equipment and receiver.
—Connect the equipment into an outlet on a circuit different from that to which the receiver is connected.
—Consult the dealer or an experienced radio/TV technician for help.

Note: The Grantee is not responsible for any changes or modifications not expressly approved by the party responsible for compliance. such modifications could void the user's authority to operate the equipment.

Model: MAE30, MAB30, R20, MAT30
The device has been evaluated to meet general RF exposure requirement.
To maintain compliance with FCC's RF exposure guidelines, the distance must be at least 20cm between the radiator and your body, and fully supported by the operating and installation

Model: MAS30
The device has been evaluated to meet general RF exposure requirement. The SAR limit of USA(FCC) is 1.6 W/kg averaged over one gram of tissue. Device types SpO2 Module with MAS30 (FCC ID: 2A8WB-MAS30) has also been tested against this SAR limit. The use of accessories that do not satisfy these requirements may not comply with FCC RF exposure requirements, and should be avoided.

IC Warning
This device contains licence-exempt transmitter(s)/receiver(s) that comply with Innovation, Science and Economic Development Canada’s licence-exempt RSS(s). Operation is subject to the following two conditions:
(1)This device may not cause interference.
(2)This device must accept any interference, including interference that may cause undesired operation of the device.
Cet appareil contient des émetteurs/récepteurs exempts de licence qui sont conformes aux normes CNR exemptes de licence d’Innovation, Sciences et Développement économique Canada. Son fonctionnement est assujetti aux deux conditions suivantes :
(1)Cet appareil ne doit pas causer d’interférences.
(2)Cet appareil doit accepter toute interférence, y compris celles qui peuvent entraîner un fonctionnement indésirable de l’appareil.

Model: MAE30, MAB30, R20, MAT30
The device has been evaluated to meet general RF exposure requirement. To maintain compliance with RSS-102 -Radio Frequency (RF) Exposure guidelines, this equipment should be installed and operated with a minimum distance of 20cm between the radiator and your body.
le dispositif de a été évalué à répondre général rf exposition exigence.pour maintenir la conformité avec les directives d'exposition du RSS-102-Radio Fréquence (RF). ce matériel doit être installé et exploité à une distance minimale de 20cm entre le radiateur et votre corps.

Model: MAS30
The device has been evaluated to meet general RF exposure requirement. To maintain compliance with RSS-102 - Radio Frequency (RF) Exposure guidelines. The SAR limit of IC is 1.6 W/kg averaged over one gram of tissue. Device types SpO2 Module with MAS30 (IC: 29502-MAS30) has also been tested against this SAR limit. The use of accessories that do not satisfy these requirements may not comply with IC RF exposure requirements, and should be avoided.

Cet appareil a été évalué et est conforme aux exigences générales d'exposition aux radiofréquences (RF). Il respecte les directives RSS-102 sur l'exposition aux radiofréquences (RF). La limite DAS (débit d'absorption spécifique) d'IC est de 1,6 W/kg, en moyenne sur un gramme de tissu. Les appareils SpO2 Module avec MAS30 (IC : 29502-MAS30) ont également été testés conformément à cette limite DAS. L'utilisation d'accessoires non conformes à ces exigences peut entraîner une non-conformité aux exigences d'exposition aux RF d'IC et devrait être évitée.

5.2 GHz band is restricted to indoor use only.
La bande de 5,2 GHz est limitée à une utilisation à l’intérieur seulement.